McKinney®
ASSA ABLOY

TEMPLATE 225-02

Effective date: MAy 17, 2002
Supercedes: All Previous

TEMPLATE 065-02

EP-5J
TEMPLATE PIVOT SET - CENTER HUNG (DOUBLE ACTING)

DO NOT SCALE

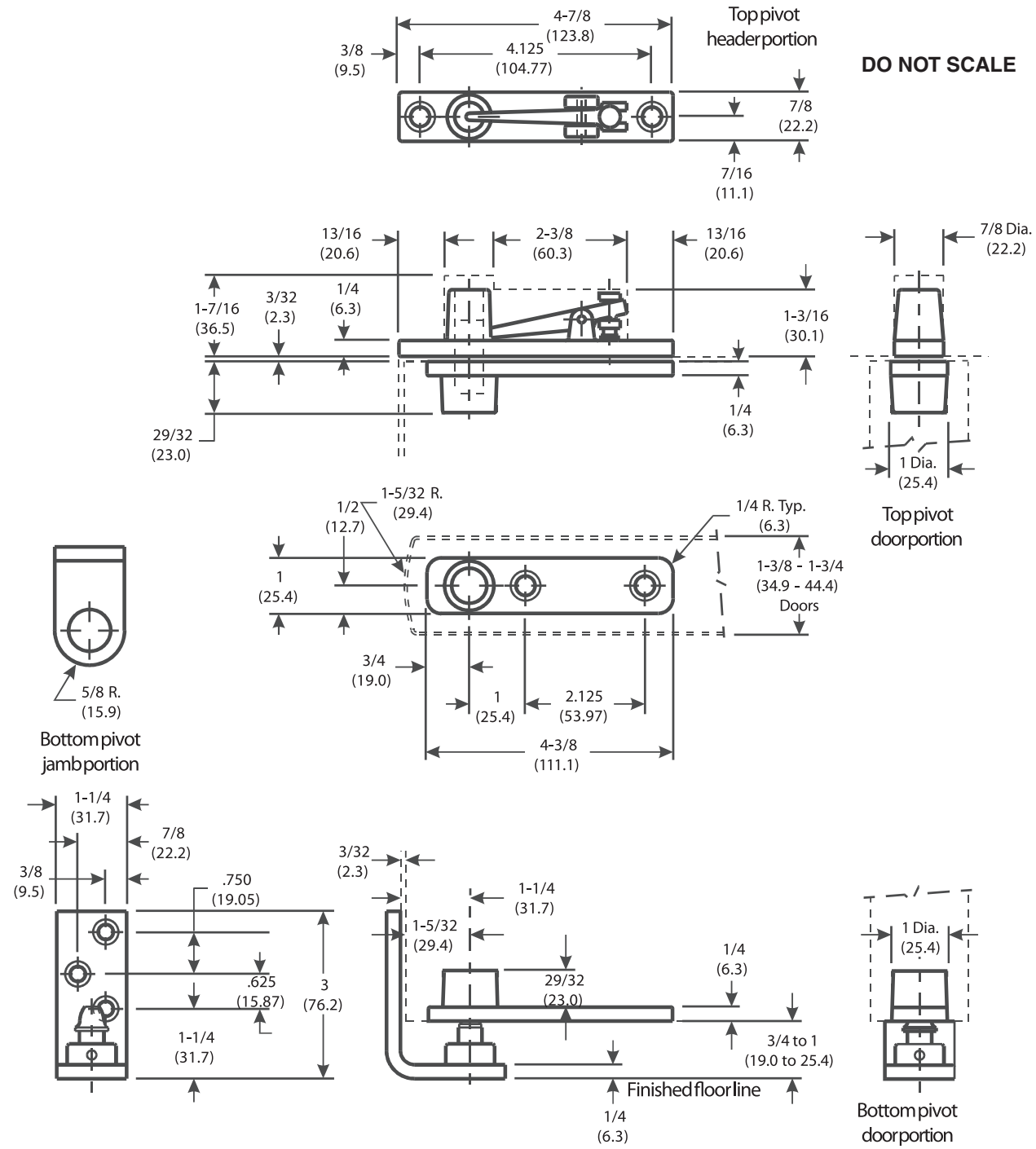

McKINNEY Template Center Hung Pivot Set for double acting door is made to conform to this drawing.
Machine Screw Size - 1/2 x 1/4-20 F.H.
Wood Screw Size - 1-1/2 x 14 F.H.

McKINNEY Products Company • 225 Episcopal Road • Berlin, CT 06037 • PHONE: 800-346-7707 • FAX: 800-541-1073

ASSA ABLOY, the global leader in door opening solutions

Copyright © 1998, 2000, 2002, 2008, McKinney Products Company, an ASSA ABLOY Group company. All rights reserved.
Reproduction in whole or in part without the express written permission of McKinney Products Company is prohibited.