Architectural Door Accessories

ASSA ABLOY
Opening Solutions

McKinney EP-5J Center Hung Pivot With Jamb Mounted Bottom Pivot

Experience a safer and more open world

For doors 1 3/8" to 1 3/4" thick x 3'-6" x 8'-0" weighing up to 135 pounds

Hollow Metal Door & Frame

Note: Door & Frame should be pre-prepared in accordance with McKinney Template #225.

1. Attach the **header pivot** to the jamb header. Make sure that the **header pivot pin** is in the fully retracted position by turning the **adjusting screw** counterclockwise.
2. Attach the **top door socket** (with the oil impregnated bearing) to the top of the door.
3. Attach the **bottom door socket** (with the radial thrust bearing) to the bottom of the door.
4. Attach the **jamb bracket** to the jamb.
5. Place the door on the **bottom pivot pin**. With the door in the 90° open position, swing the top of the door into alignment with the **top pivot pin** and fully extend it into the **top door socket** by turning the **adjusting screw** clockwise.
6. Loosen the **set screw** (with a 3/32" hex key) in the front of the bottom pivot bushing and adjust the **bottom pivot pin** if necessary (to provide the proper header or floor clearance). Using the tool provided, turn the **bottom pivot pin** counterclockwise to raise the door and clockwise to lower it. Tighten the **set screw**.

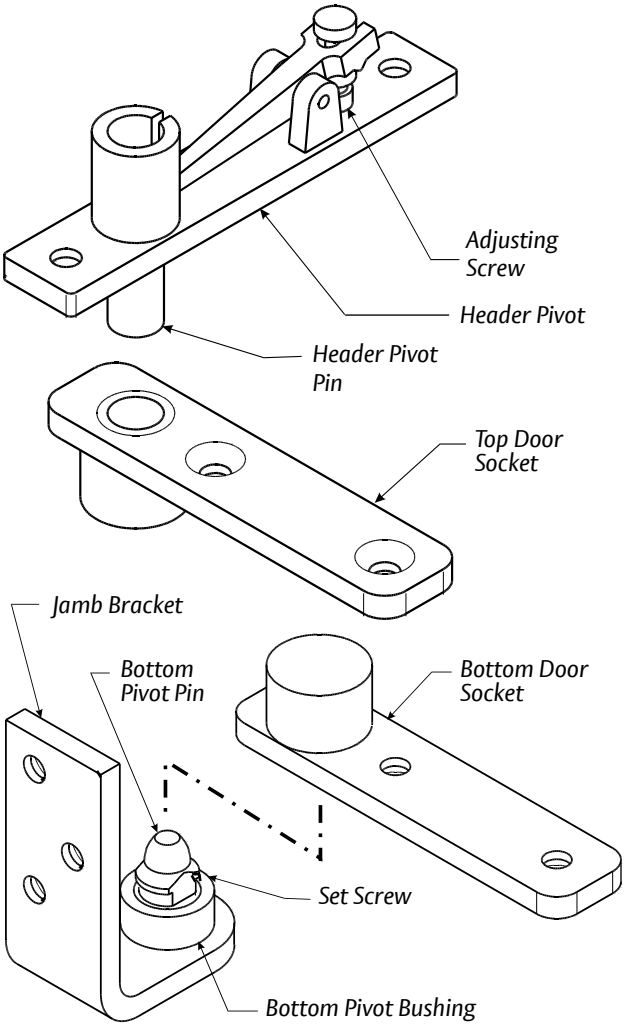

Wood Door

Note: 1. If hollow metal frames are used, they should be re-prepared in accordance with McKinney Template #225.

2. The following instructions assume that a wood frame is used. If this is not the case, disregard the steps which refer to frame preparation. All mortises should be prepared per McKinney Template.

1. Prepare mortises in the top and bottom of the door and attach the **top door socket** (with the oil impregnated bearing) and the **bottom door socket** (with the radial thrust bearing).
2. Prepare a mortise in the jamb header and attach the **header pivot**.
3. Locate the position of the **jamb bracket** by measuring from the edge of the frame to the center of the cutout for the **header pivot**. Make a line on the floor in the same relative location perpendicular to the jamb. Align the **jamb bracket** so that it is centered on this line and mark the holes and vertical plate portion of the **jamb bracket** on the jamb. Drill holes, mortise the jamb and attach the **jamb bracket**.
4. Place the door on the **bottom pivot pin**. With the door in the 90° open position, swing the top of the door into alignment with the **top pivot pin** and fully extend it into the **top door socket** by turning the **adjusting screw** clockwise.
5. Loosen the **set screw** (with a 3/32" hex key) in the front of the **bottom pivot bushing** and adjust the **bottom pivot pin** if necessary (to provide the proper header or floor clearance). Using the tool provided, turn the **bottom pivot pin** counterclockwise to raise the door and clockwise to lower it. Tighten the **set screw**.

Copyright © 2017, 2020, ASSA ABLOY Accessories and Door Controls Group, Inc. All rights reserved. Reproduction in whole or in part without the express written permission of ASSA ABLOY Accessories and Door Controls Group, Inc. is prohibited.

The ASSA ABLOY Group is the global leader in access solutions. Every day, we help billions of people experience a more open world.

ASSA ABLOY Opening Solutions leads the development within door openings and products for access solutions in homes, businesses and institutions. Our offering includes doors, frames, door and window hardware, locks, perimeter fencing, access control and service.

ASSA ABLOY
Opening Solutions

DO NOT SCALE
DIMENSIONS: INCHES (MM)

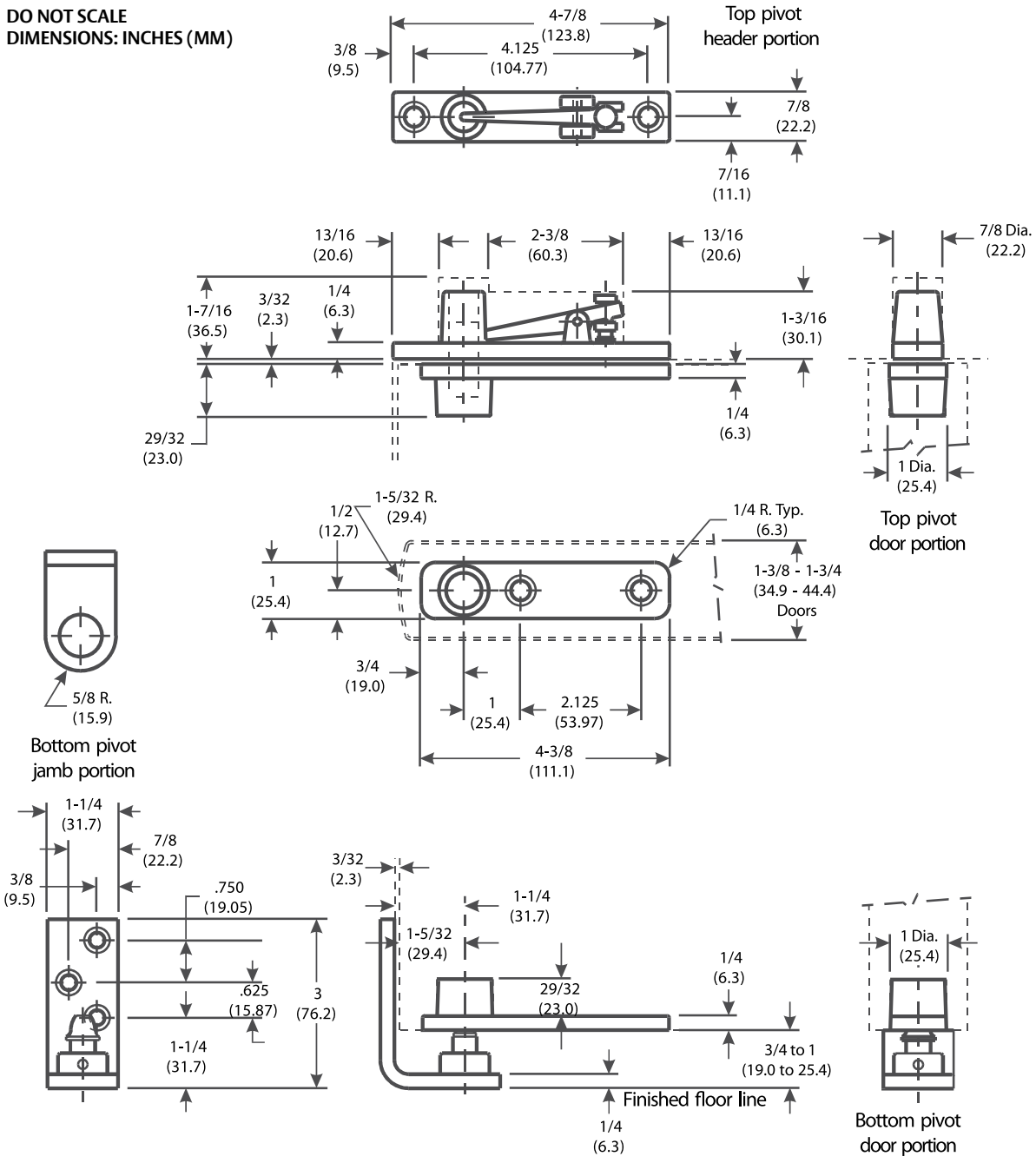

Template 225-02

Effective date:
May 17, 2002

Supercedes: All Previous

McKINNEY Template Center Hung Pivot Set for double acting door is made to conform to this drawing.

Machine Screw Size:
1/2 x 1/4-20 F.H.

Wood Screw Size:
1 1/2 x 14 F.H.

ASSA ABLOY Opening Solutions
Architectural Accessories Group
Memphis, TN 38141

Copyright © 2017, 2020, ASSA ABLOY Accessories and Door Controls Group, Inc. All rights reserved. Reproduction in whole or in part without the express written permission of ASSA ABLOY Accessories and Door Controls Group, Inc. is prohibited.