Installation Instructions

CLX3300 Series Cylindrical Lockset

Corbin Russwin

ASSA ABLOY

1. Part Identification

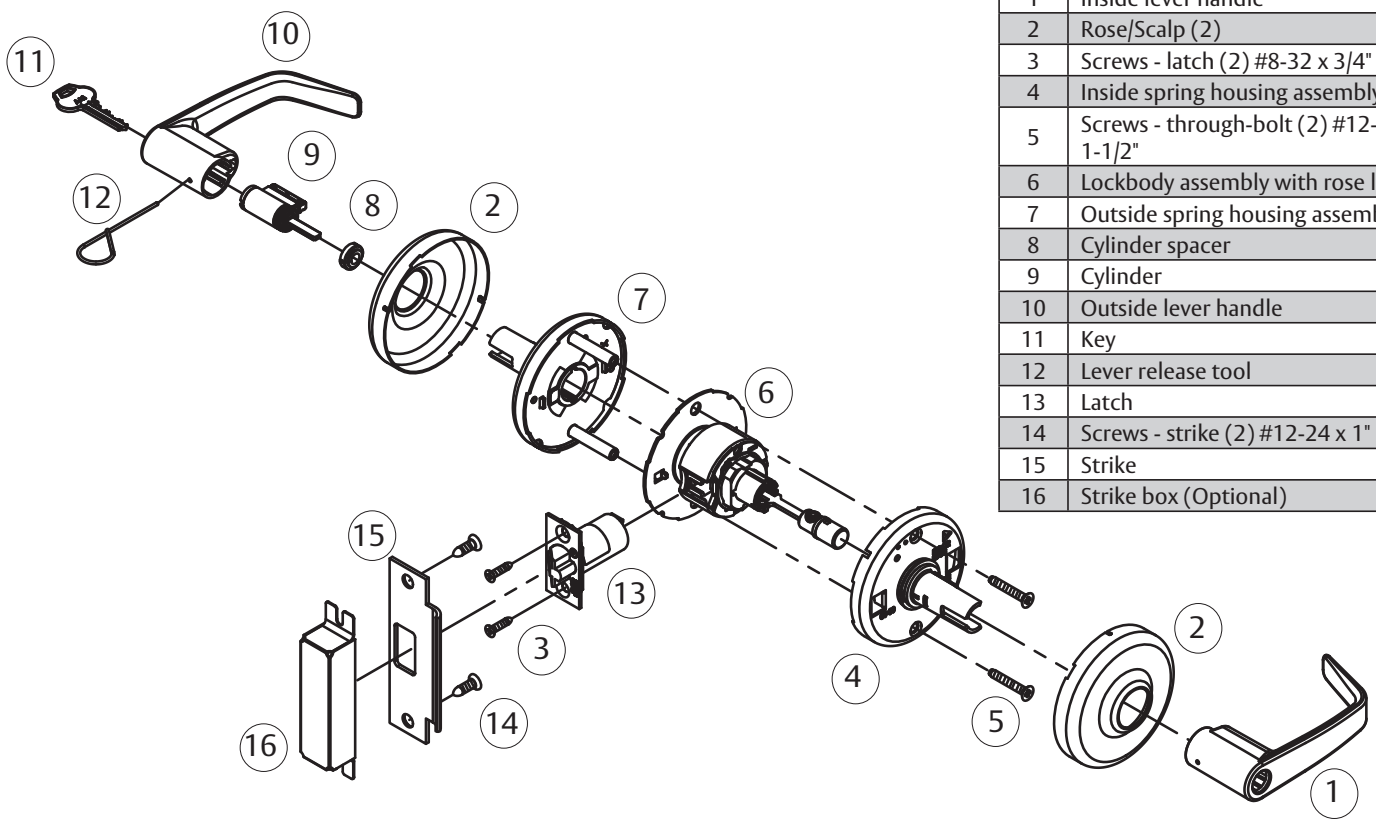

Fig.	Description
1	Inside lever handle
2	Rose/Scalp (2)
3	Screws - latch (2) #8-32 x 3/4"
4	Inside spring housing assembly
5	Screws - through-bolt (2) #12-24 x 1-1/2"
6	Lockbody assembly with rose liner
7	Outside spring housing assembly
8	Cylinder spacer
9	Cylinder
10	Outside lever handle
11	Key
12	Lever release tool
13	Latch
14	Screws - strike (2) #12-24 x 1"
15	Strike
16	Strike box (Optional)

2. Tools Required

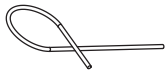

Lever Release Tool (Included)



#2 Phillips Head Screwdriver



5/32" Drill Bit



11/32" Drill Bit



1/8" Drill Bit

⚠ WARNING

This product can expose you to lead which is known to the state of California to cause cancer and birth defects or other reproductive harm. For more information go to www.P65warnings.ca.gov.

⚠ WARNING

Attention Installer: Improper installation may result in damage to the product and void the factory warranty.

For installation assistance contact Corbin Russwin
1-800-543-3658 • techsupport.corbinrusswin@assaabloy.com

Copyright © 2021-2025, ASSA ABLOY Access and Egress Hardware Group, Inc. All rights reserved. Reproduction in whole or in part without the express written permission of ASSA ABLOY Access and Egress Hardware Group, Inc. is prohibited.

FM566-EN 12/25

Experience a safer and more open world

3. Door Preparation

1. Use template FM567 to mark the door. See Figure 1.
2. Drill the door according to the template.
3. Verify the dimensions. See Figure 2.
4. Install the strike. See Figure 3.

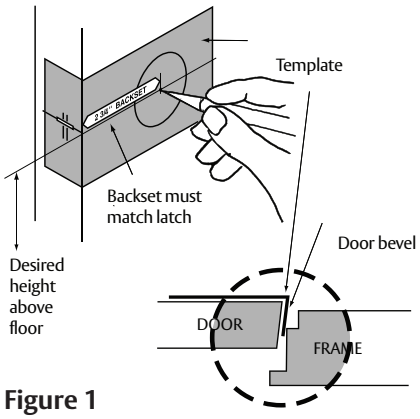

Figure 1

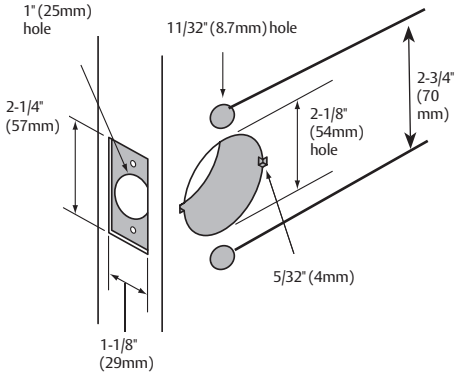

Figure 2

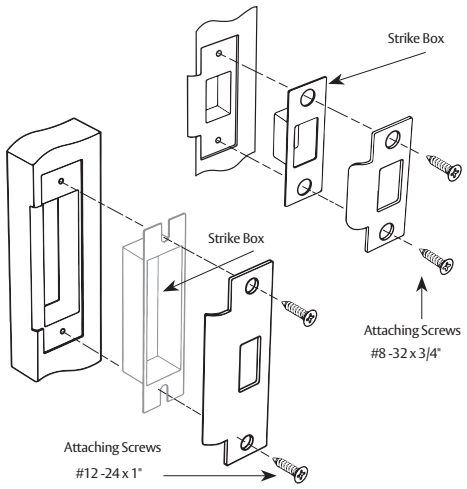

Figure 3

IMPORTANT

- The accuracy of door preparation is critical for proper functioning and security of this lever handle lock. Misalignment can cause premature wear and a lessening of security.
- Verify backset before marking and drilling door.

4. Latch Installation

1. Insert latch in door. Bevel edge of bolt must face the strike plate
2. Attach with (2) #8-32 x 3/4" screws supplied.

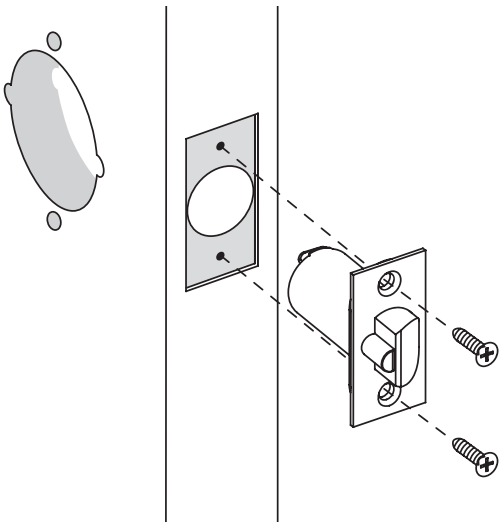

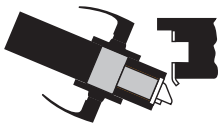

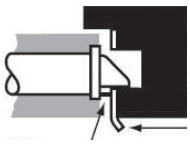

Strike

For installation assistance contact Corbin Russwin
1-800-543-3658 • techsupport.corbinrusswin@assaabloy.com

Copyright © 2021-2025, ASSA ABLOY Access and Egress Hardware Group, Inc. All rights reserved. Reproduction in whole or in part without the express written permission of ASSA ABLOY Access and Egress Hardware Group, Inc. is prohibited.

Experience a safer and more open world

5. Adjust Lock for Door Thickness (if necessary)

Lock is factory preset for 1-3/4" (44mm) doors unless specified. To adjust lock to door thickness if other than 1-3/4" (44mm):

1. Remove outside trim assembly from the lockbody assembly. The lever, rose, and spring housing will remove as one piece from the lockbody (See Figure 4).
2. Rotate outside rose liner to adjust lock to fit door thickness, so distance (Dimension A) from inside surface of liner to centerline of retractor is half the thickness of the door (See chart and Figure 5).
3. Reassemble outside trim assembly onto lockbody assembly.

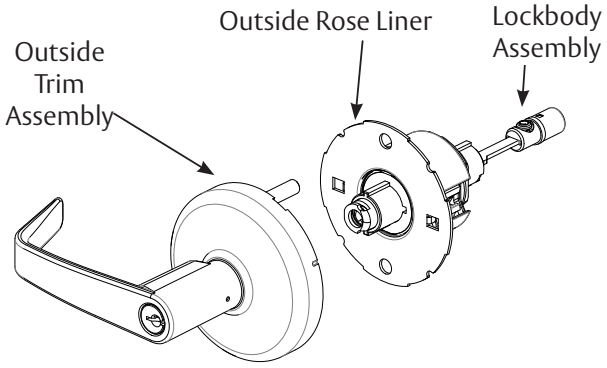

Figure 4

Door Thickness	Dimension A
1-3/4" (44 mm)	**7/8**" (22 mm)
2" (50 mm)	**1**" (25 mm)
2-1/4" (57 mm)	**1-1/8**" (29 mm)

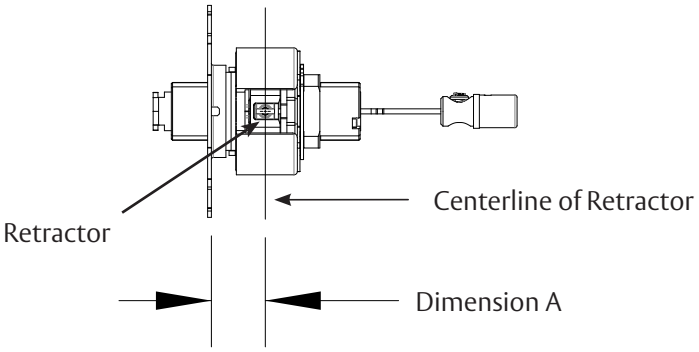

Figure 5

6. Install Outside Assembly

To adjust lock to door thickness if other than 1-3/4" (44mm) refer to Section 5.

1. Insert outside trim assembly into door from outside making sure that lockbody hooks latch case and retractor engages bolt tail(s) (See Figure 6).

DO NOT FORCE. (If lockbody does not engage latch easily, check door preparation for errors.)

Latch bolt tail should be centered in depth of retractor. If it is not, refer to Section 5 to properly adjust the lock for door thickness.

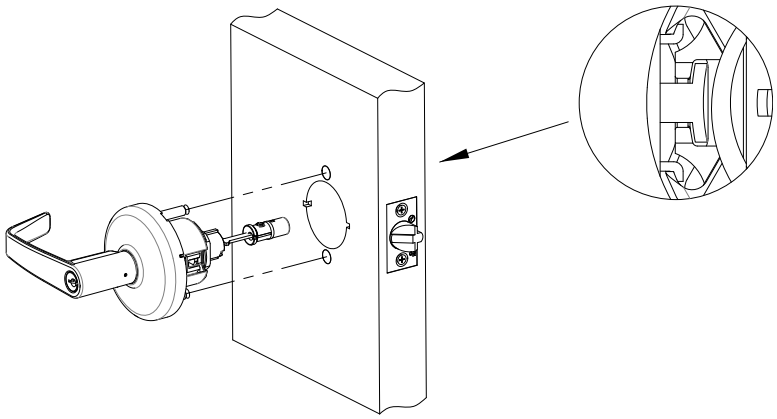

Figure 6

For installation assistance contact Corbin Russwin
1-800-543-3658 • techsupport.corbinrusswin@assaabloy.com

Copyright © 2021-2025, ASSA ABLOY Access and Egress Hardware Group, Inc. All rights reserved. Reproduction in whole or in part without the express written permission of ASSA ABLOY Access and Egress Hardware Group, Inc. is prohibited.

Experience a safer and more open world

7. Install Inside Components

1. Remove lever and rose from inside spring housing assembly.
2. Align and insert inside spring housing onto the installed lockbody.
3. Install screws to tighten the lock to the door.
4. Orient dimples on side of rose with openings on side of spring housing assembly (See Figure 7).
5. Install rose onto the inside spring housing assembly.
6. In the unlocked position, verify the button is adjusted properly. See Figure 8 for proper alignment. Adjust if necessary.
7. Install inside lever.

Note: Test for proper operation before closing door.

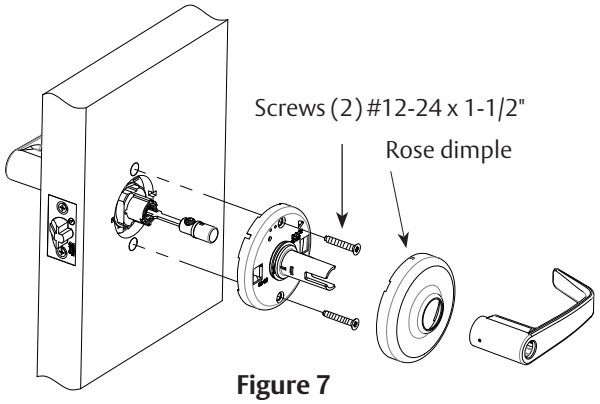

Figure 7

Button in-line with shank indicates correct position based upon door thickness. If the button needs to be adjusted, position it by depressing the plunger, moving it in or out as needed.

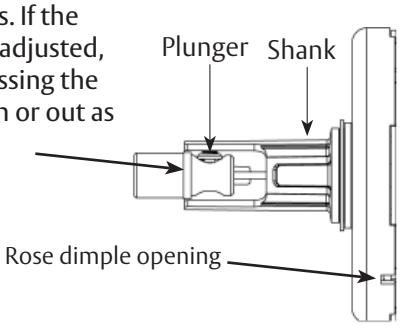

Figure 8

8. Cylinder Installation (If units provide less cylinder or with construction cores)

IMPORTANT Before installing cylinders:

- Use a flat blade screwdriver to rotate cam until the driver points are in a 6 and 12 o'clock position (See Figure 15 on next page).
- Timing may need adjusting on certain functions. See Section 10 Lock Timing on pages 5 and 6.

a. Fixed Core Cylinder (Figure 9)

Verify that the cylinder spacer is already installed into the shank on the outside spring housing assembly. Cylinder spacer should be removed for 7-Pin cylinder. Note orientation of spacer, if it needs to be reinstalled.

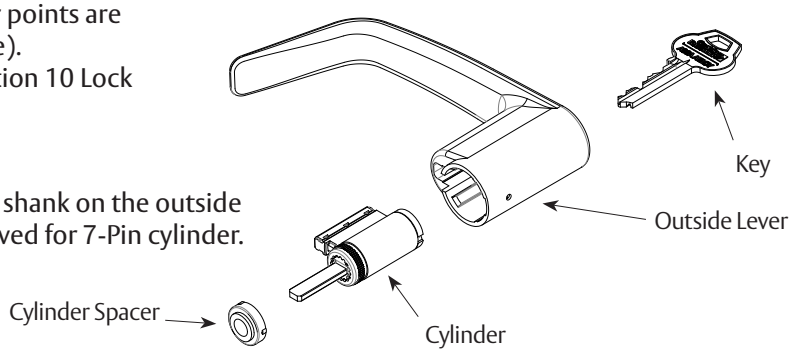

Figure 9

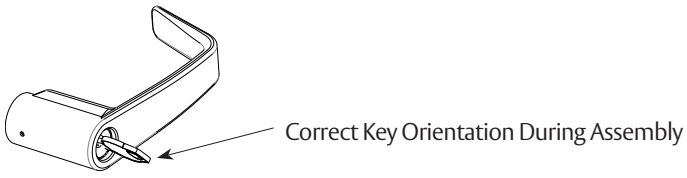

b. Interchangeable Core LFIC or SFIC (Figure 10)

1. Remove temporary construction core or plastic core. If keyed, use Control Key. Rotate 15° and pull.
2. Insert permanent core into lever with control key. Rotate 15° and remove key..

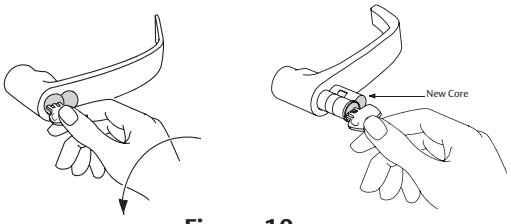

Figure 10

FM566-EN 12/25

For installation assistance contact Corbin Russwin
1-800-543-3658 • techsupport.corbinrusswin@assaabloy.com

Copyright © 2021-2025, ASSA ABLOY Access and Egress Hardware Group, Inc. All rights reserved. Reproduction in whole or in part without the express written permission of ASSA ABLOY Access and Egress Hardware Group, Inc. is prohibited.

Experience a safer and more open world

9. Lever Removal and Installation

a. Standard Cylinder (Figure 11)

To Remove:
Rotate key 45° and hold. Depress lever catch with lever release tool.

To Install:
With driver points at 6 and 12 (See Figure 15), rotate key 45° in either direction and slide lever on over the lever catch. Confirm the lever will not pull off.



Figure 11

b. Interchangable Core LFIC or SFIC (Figure 12)

To Remove:
Remove core and tailpiece, using key marked "control."

Insert slotted screwdriver or lever release tool into cylinder opening and make contact with lever catch.

Pull lever catch horizontally towards the opposite side of the cylinder opening and remove lever.

To Install:
Without the core installed, slide the lever on over the lever catch. Confirm the lever will not pull off. Install core and tailpiece, using key marked "control."

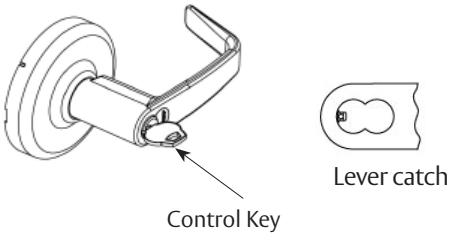

Figure 12

c. Plain Lever (Figure 13) & Push/Turn Button (Figure 14)

To Remove:
Depress lever catch with lever release tool, remove lever.

To Install:
Slide the lever on over the lever catch. Confirm the lever will not pull off.

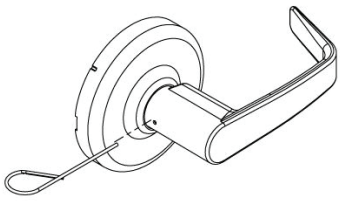

Figure 13

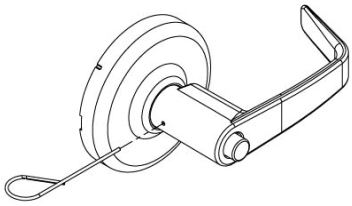

Figure 14

10. Lock Timing

Timing is required if cylinders were not provided factory installed. See page 8 for CLX3329 hotel function.

a. Functions CLX3352, CLX3355, & CLX3382

1. Remove cylinder lever(s) to view internal cam (See Figure 15).
2. Adjust internal cam on each side that has a cylinder. To adjust:
   a. Use a slotted screwdriver to rotate cam fully clockwise.
   b. Rotate cam back until driver points are at the 6 and 12 o'clock position.
3. Re-install levers with cylinders (See Section 9a).
4. Test cylinder(s) with key before closing door.
5. Confirm outside key rotates approximately 180° in both directions.
6. If outside key rotates 360°, repeat steps 1-5.

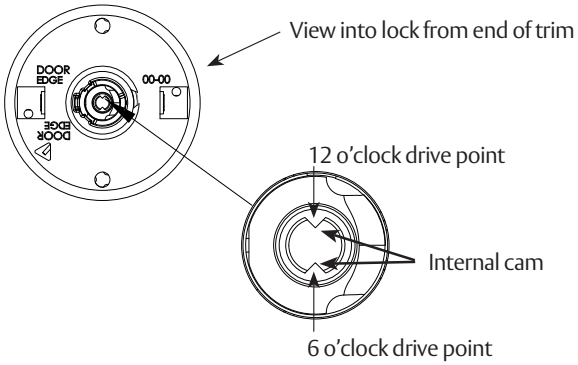

Figure 15

For installation assistance contact Corbin Russwin
1-800-543-3658 • techsupport.corbinrusswin@assaabloy.com

Copyright © 2021-2025, ASSA ABLOY Access and Egress Hardware Group, Inc. All rights reserved. Reproduction in whole or in part without the express written permission of ASSA ABLOY Access and Egress Hardware Group, Inc. is prohibited.

Experience a safer and more open world

10. Lock Timing, continued

b. Functions CLX3362, CLX3375, CLX3376 & CLX3381

1. Perform steps 1 through 4 in section 10a.
2. Confirm outside key rotates from shed position approximately 225° counterclockwise to lock and approximately 180° clockwise to unlock.
3. If outside key rotates 360° from shed position, repeat steps 1 and 2.

Note: For CLX3376 function, clockwise key rotation from shed position is less than 90°.

c. Function CLX3372

1. Perform steps 1 through 4 in section 10a.
2. When door is locked, confirm outside key rotates approximately 180° in both directions.
3. Confirm inside key rotates 90° clockwise from shed postion to lock and 90° counter-clockwise to unlock.

11. Other Function Instructions

a. Remove Outside Lever for Exit Latch (CLX3340NT)

1. Remove inside lever (See Section 9).
2. Remove rose.
3. Remove (2) mounting screws and inside housing assembly.
4. Remove outside trim assembly.
5. Push and hold plug back (located inside of outside trim assembly). See Figure 16.
6. Push lever catch with lever release tool and remove lever.

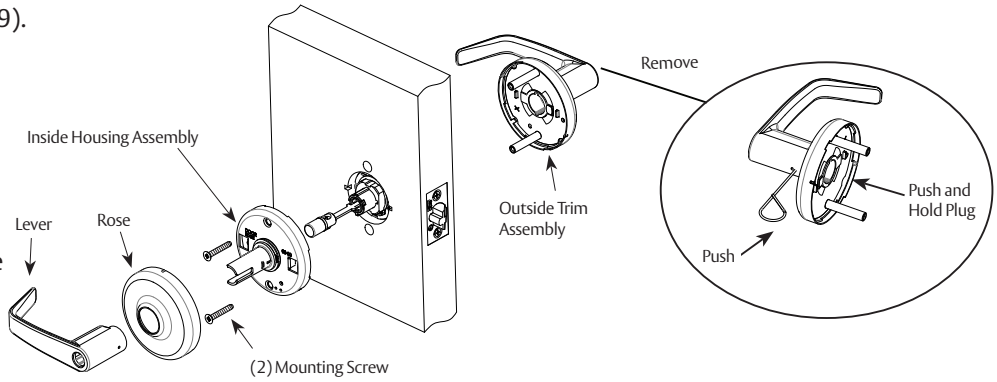

Figure 16

b. Install Dummy Trim

Half Dummy (CLX3350)

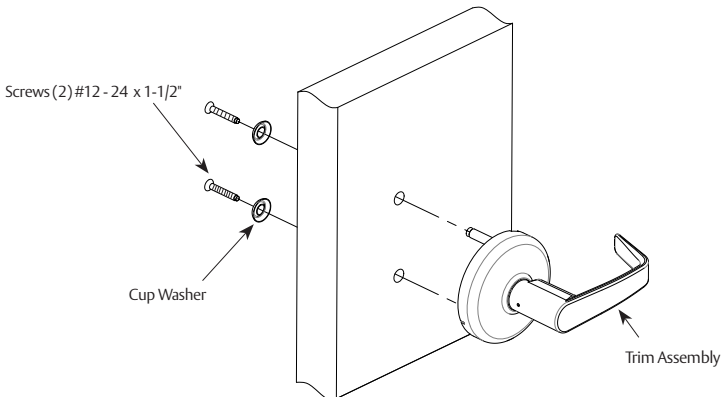

Full Dummy (CLX3370)

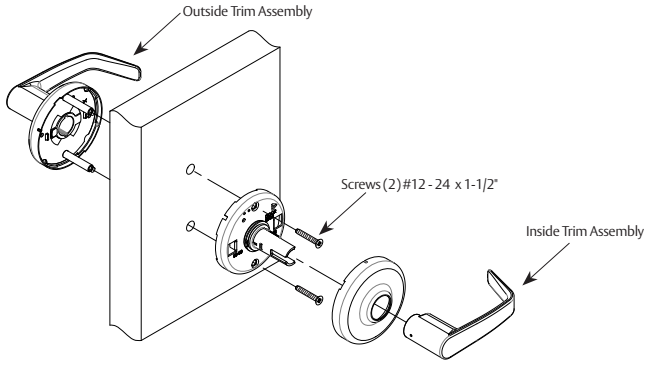

For installation assistance contact Corbin Russwin
1-800-543-3658 • techsupport.corbinrusswin@assaabloy.com

Copyright © 2021-2025, ASSA ABLOY Access and Egress Hardware Group, Inc. All rights reserved. Reproduction in whole or in part without the express written permission of ASSA ABLOY Access and Egress Hardware Group, Inc. is prohibited.

Experience a safer and more open world

12. Miscellaneous Options

a. 1-3/8" Doors (D138)

Install (1) adapter plate between the door and rose assemblies (both sides).

- Inside trim to be aligned with holes marked screw slot.
- Outside trim through-bolts to be aligned with through-bolt holes marked on adapter plate.

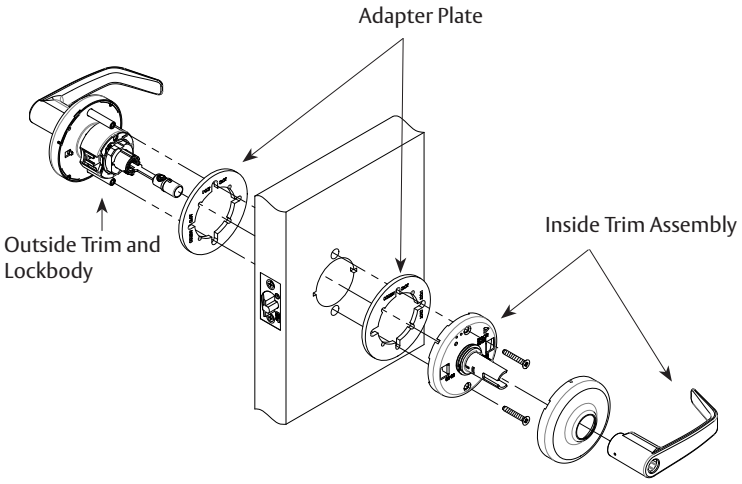

b. Lever to Accept Schlage® LFIC (M69)

1. Lock provided less core. Tailpiece included with lock.
2. If needed, rotate clip to leave appropriate slot on tailpiece open for locking pin.
3. Depress the locking pin and unscrew threaded cap from end of core.
4. Place tailpiece inside the exposed end of core with locking pin in open slot.
5. Reinstall threaded cap.
6. Install core in lock normally.

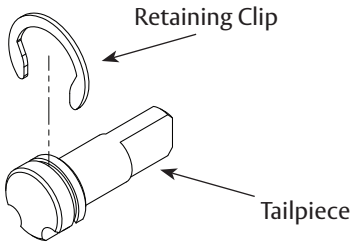

c. Lever to Accept Schlage® or ASSA ABLOY ACCENTRA® Fixed Core Cylinder (M06 or YC Option)

1 Lock provided less core.

2. Depress cap pin and unscrew end cap to remove tailpiece from competitor cylinder.
3. Insert new tailpiece, in orientation shown.
4. Re-assemble end cap over new tailpiece.
5. Apply spacer, if needed.

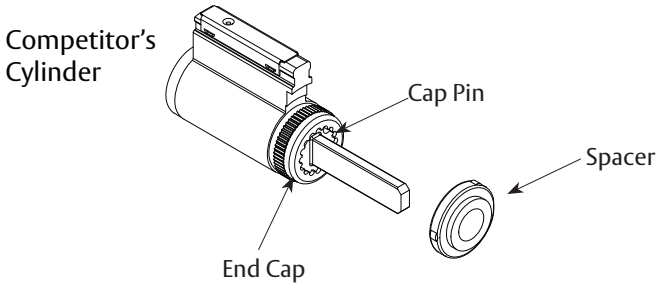

d. Lever to Accept ASSA ABLOY ACCENTRA® LFIC (YRC Option)

1. Lock provided less core.
2. Slide provided spacer over tailpiece
3. Insert driver assembly into back of core.

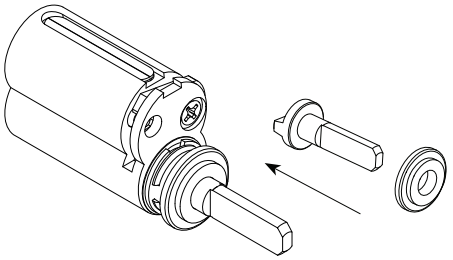

FM566-EN 12/25

Copyright © 2021-2025, ASSA ABLOY Access and Egress Hardware Group, Inc. All rights reserved. Reproduction in whole or in part without the express written permission of ASSA ABLOY Access and Egress Hardware Group, Inc. is prohibited.

Experience a safer and more open world

13. CLX3329 Hotel Function Timing Adjustment

Timing of the hotel cylinder is set at the factory for the standard door thickness. If the change key or emergency key does not operate properly, follow the steps below:

1. Set the lock to the unlocked position, remove lever and cylinder from the outside trim. See lever removal instruction on page 5.
2. Insert adjustment tool (provided with lock) into interior cap located within the shank (Figures 17 & 18).
3. Rotate cap clockwise until fully tight (Figure 19).

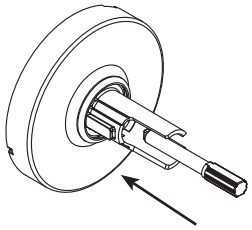

Figure 17

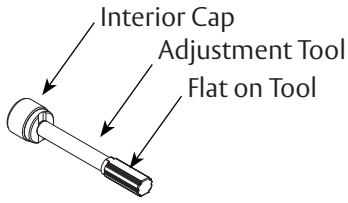

Figure 18

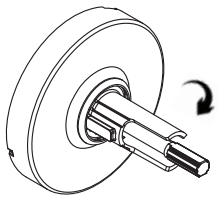

Figure 19

4. Rotate cap back counter-clockwise (Figure 20) until tool handle is approximately in line with the end of the shank as shown in Figure 21 for Fixed Core cylinder (FC) or in Figure 22 for Interchangeable Cylinder (LFIC). The flat on the tool should be at the 12 o'clock position.

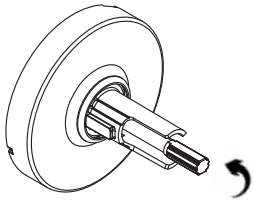

Figure 20

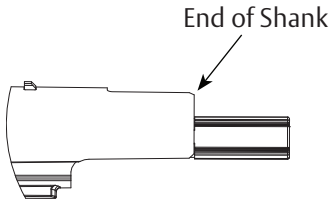

Figure 21

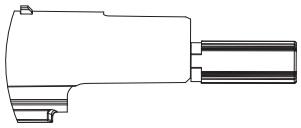

Figure 22

5. Install cylinder in the lever (see cylinder installation instruction on page 4).
6. Turn key 90 degrees counter-clockwise and install lever (with cylinder) onto shank.
7. Test to confirm that both the operating and the emergency keys work properly in both the unlocked and locked (pushed/pushed and turn) positions.
   - If the operating key is still working in the locked position, the interior cap needs to be turned out (CCW) 1/2 turn.
   - If the emergency key is not working in the locked position, the interior cap needs to be turned in (CW) 1/2 turn.

Troubleshooting:

- If having issue fine tuning the adjustment, re-start from #3.
- If cylinder will not install, re-start from #3.

For installation assistance contact Corbin Russwin
1-800-543-3658 • techsupport.corbinrusswin@assaabloy.com

Copyright © 2021-2025, ASSA ABLOY Access and Egress Hardware Group, Inc. All rights reserved. Reproduction in whole or in part without the express written permission of ASSA ABLOY Access and Egress Hardware Group, Inc. is prohibited.

Experience a safer and more open world