CATALOG

ELECTROMAGNETIC DOOR HOLDER/ RELEASES

DESIGNED FOR REMOTE DOOR RELEASE APPLICATIONS

NORTON RIXSON

ASSA ABLOY

Experience a safer and more open world

TABLE OF CONTENTS

ELECTROMAGNETIC DOOR HOLDER/RELEASES

INTRODUCTION

Norton Rixson offers a wide range of electromagnetic door holders/releases. Designed for virtually any remote door release application, electromagnetic door holders/releases primarily hold fire doors open until released by an alarm or smoke detector.

Floor mounted units are available for single or back-to-back doors. Wall mounted units feature concealed or surface wiring, low profile projection or high hold force.

TABLE OF CONTENTS

How to Select Product....3-4
980M Floor Mounted....5
981M Floor Mounted Back to Back Doors....5
989, 990M Low Projection Wall Mounted....6
991M Hazardous Location Wall Mounted....7
993M High Hold Wall Mounted....7
9930M High Hold Floor Mounted....7
994M Wall Mounted Adjustable Armature....8
996M Surface Mounted....8
997M, 998M Wall Mounted....9
999M Universal Wall Mounted....10
Wiring Schematics....11
Accessories....12
How to Order....13
Parts List....14-18

WARNING

This product can expose you to lead which is known to the state of California to cause cancer and birth defects or other reproductive harm. For more information go to www.P65warnings.ca.gov.

Experience a safer and more open world

HOW TO SELECT A PRODUCT

ELECTROMAGNETIC DOOR HOLDER/RELEASES

GENERAL INFORMATION

Electromagnetic door holder/releases are designed for virtually any remote door release applications. They must be used in conjunction with closing devices.

- Fire/smoke barrier doors
  - Door releases when tripped by an alarm or smoke detector
- Private offices
  - Door releases when triggered by a remote switch
- All devices come with a wall/floor portion and a door portion (armature)
- Circuit normally closed
- Door portions have screws and plates to accommodate surface and concealed mounting

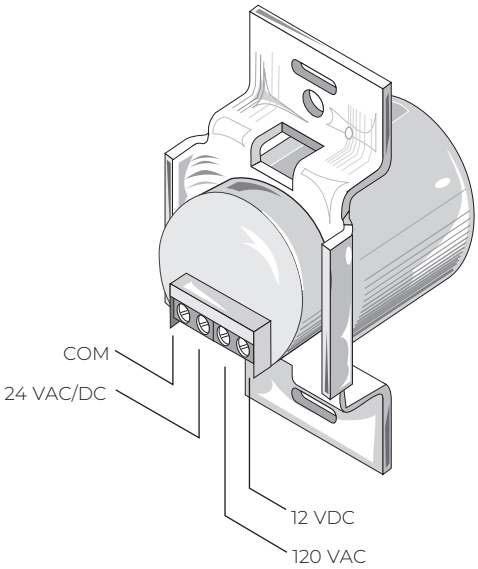

Features

- 25-40lbs. holding force, except where noted
- Fail-safe operation; power failure releases door to close
- Positive release button initiates closing motion
- Tri-Volt (120VAC, 24VAC/DC, 12VDC) is standard on models: 980M, 981M, 989, 990M, 994M, 996M, 997M, 998M and 999M - see
- Spotting template included
- For 50-55lbs. of holding force on models 980M, 981M, 989, 990M, 994M, 996M, 997M, 998M and 999M, specify model number x 120VAC, 24VAC, 24VDC or 12VDC when ordering. Not available in Tri-Volt coils.

Certifications

- See individual sections for compliance with ANSI/BHMA A156.15 standards
- UL-cUL listed
- Cal Fire 3550-0047:0001 (980M, 981M, 990M, 991M, 996M, 997M, 998M, and 999M)
- Cal Fire 3550-0047:0110 (993M)

Specifications

All electromagnetic door holder/releases shall be supplied by architectural hardware supplier. All units shall have a single coil to accommodate 12VDC, 24VAC, 24VDC and 120VAC. The coils shall be independently wound, employing a fuse. Armatures will have positive release button.

HOW TO SELECT PRODUCT

ELECTROMAGNETIC DOOR HOLDER/RELEASES

Prior to determining the product you will need to use, begin by looking at the door and perpendicular wall relationship.

- Measure the distance. That will give you the "D" dimension. Select from chart A.

Chart A

If the distance from wall to door is: "D"	Use
7/16" (11)	989
1-13/16" (46)	990M
2-5/8" (67)	997M
3-5/8" (92)	998M
3-3/4" (95)	994M
4-1/8" (105)	996M
4-3/8" (111)	999M
5-1/8" (130)	998M x XK996M
6-5/8" (168) min. distance from wall	980M
6-3/4" distance between doors	981M

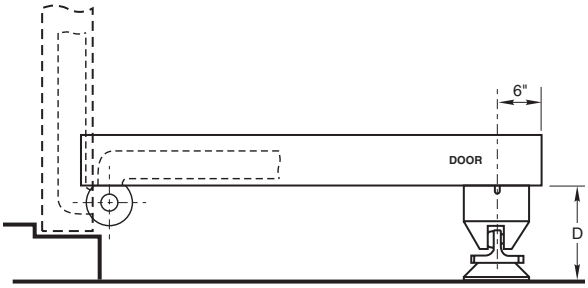

900 base has a minimum: 1-1/2" (38mm) extension.
Maximum: 10" using combination of spacers [1/2" (13mm), 3/4" (19mm), etc.] Longer armature projections may encourage abuse and/or the weight of the extended rods will pull off the face of the door.

Chart B

Junction box location should always be as close as possible to the door pull/lever/knob.

A position horizontally farther toward the hinge edge will dramatically lessen the hold open force of the magnet.

A mounting too high on the vertical plane (top of door) will make it more difficult to pull out of hold open.

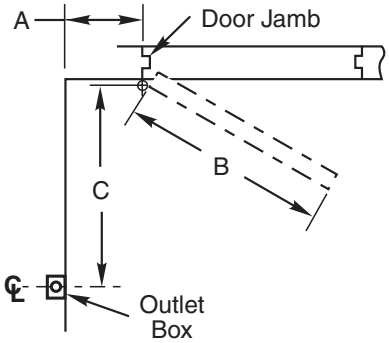

Refer to Diagram B

- How far is the centerline of the pivot/hinge from the wall? "A" dimension
- What is width of door? "B" dimension
- At what degree is the door opening? If this dimension is more than 100° consult template.
  The armature has a few degrees of adjustment but, before proceeding verify with the product template
- Dimension "C" is from pivot point to junction box centerline

Experience a safer
and more open world

FLOOR MOUNTED

ELECTROMAGNETIC DOOR HOLDER/RELEASES

MODEL 980M

Application
- Floor mount
- Single door
- Shipping weight: 4 lbs. (1.8 kg)

Features
- Concealed wiring
- Total floor space required: 6-5/8" (168mm)
- Mounting requirements: conduit connects directly to floor plate
- 2 year limited warranty

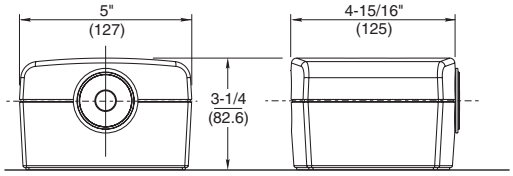

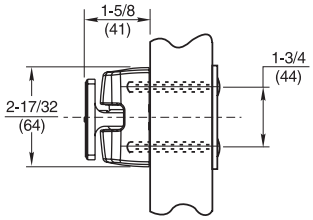

Compliance
- ANSI/BHMA A156.15, Grade 1
- ANSI/C00021

Electrical Data
- Voltage and current:
  120VAC, 60 Hz., .020 amp
  24VAC/DC, 60 Hz., .020 amp
  12VDC, .040 amp

- For 50-55 lbs. of holding force, specify voltage
  120VAC, 60Hz .017 amp
  24VAC, 60Hz .080 amp
  24VDC, .068amp
  12VDC, .180amp

MODEL 981M

Application
- Floor mount
- 2 back-to-back doors
- Shipping weight: 4-3/4 lbs. (2.2 kg)

Features
- Concealed wiring
- Floor space required: 8-1/4" (210mm)
- Mounting requirements: conduit connects directly to floor plate
- 2 year limited warranty

Compliance
- ANSI/BHMA A156.15, Grade 1
- ANSI/C00031

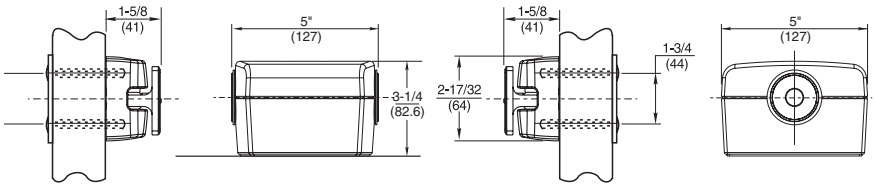

Electrical Data
- Voltage and current:
  120VAC, 60Hz., .040 amp
  24VAC/DC, .040 amp
  12VDC, .080 amp

- For 50-55 lbs. of holding force, specify voltage
  120VAC, 60Hz .034 amp
  24VAC, 60Hz .016 amp
  24VDC, .036 amp
  12VDC, .360 amp

MODEL 989

Application
- Wall mount
- Low profile
- Concealed wiring
- Shipping weight: 2 lbs. (0.9 kg)

Features
- Total projection: 7/16" (11mm)
- Mounting requirements: 2" x 4" x 2-1/2" (51 x 102 x 64mm) outlet box
- Wall must be properly reinforced and outlet box adequately fastened
- 2 year limited warranty

Compliance
- ANSI/BHMA A156.15, Grade 1
- ANSI/C00011

Electrical Data
- Voltage and current:
  120VAC, 60Hz., .020 amp
  24VAC/DC, 60Hz., .020 amp
  12VDC, .040 amp
- For 50-55 lbs. of holding force, specify voltage
  120VAC, 60Hz .017 amp
  24VAC, 60Hz .080 amp
  24VDC, .068amp
  12VDC, .180amp

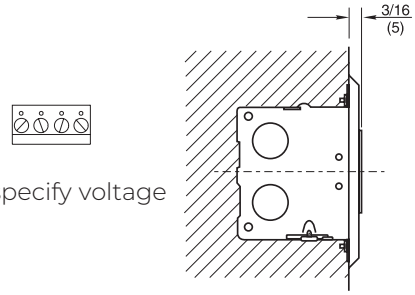

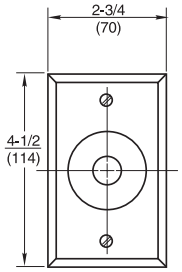

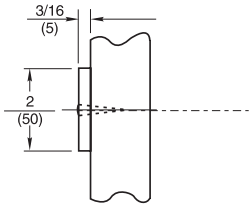

MODEL 990M

Application
- Wall mount
- Low profile
- Concealed wiring
- Shipping weight: 2 lbs. (0.9 kg)

Features
- Total projection: 1-13/16" (46mm)
- Mounting requirements: 2" x 4" x 2-1/2" (51 x 102 x 64mm) outlet box
- Wall must be properly reinforced and outlet box adequately fastened
- 2 year limited warranty

Compliance
- ANSI/BHMA A156.15, Grade 1
- ANSI/C00011

Electrical Data
- Voltage and current:
  120VAC, 60Hz., .020 amp
  24VAC/DC, 60Hz., .020 amp
  12VDC, .040 amp
- For 50-55 lbs. of holding force, specify voltage
  120VAC, 60Hz .017 amp
  24VAC, 60Hz .080 amp
  24VDC, .068amp
  12VDC, .180amp

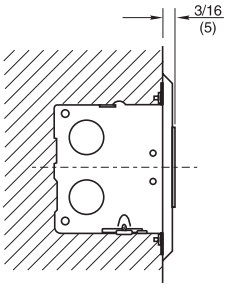

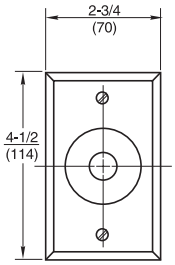

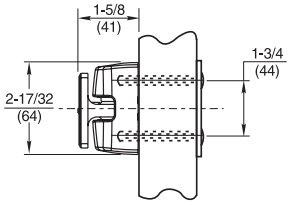

Experience a safer
and more open world

SPECIAL PURPOSE WALL MOUNTED
ELECTROMAGNETIC DOOR HOLDER/RELEASES

MODEL 991M

Application
- Wall mount
- Surface wiring
- Hazardous locations
- Shipping weight: 3 lbs. (1.4 kg)

Features
- Total projection: 4" (101mm)
- Approved for class I division 2, class II division 2, groups F and G and class III locations
- Unit includes a sealed surface-mounted junction box
- 2 year limited warranty

Compliance
- ANSI/BHMA A156.15, Grade 1
- ANSI/C00011

Electrical Data
- Voltage and current:
  120VAC, 60Hz., .017 amp
  24VAC, .080 amp
  12VAC, .180 amp
  24VDC, .068 amp

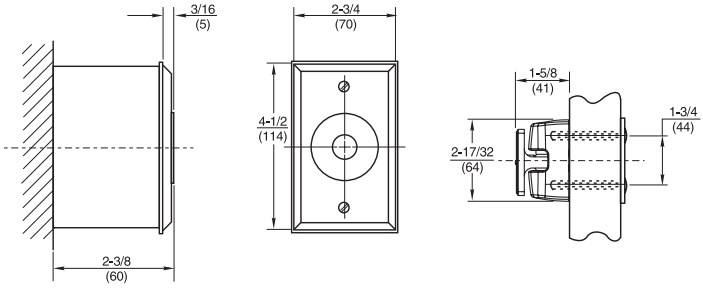

MODEL 993M

Application
- High hold
- Surface or concealed mounting
- Floor or wall application
- Shipping weight: 3 lbs. (1.4 kg)

Features
- 275 lb. holding force
- Total projection: 5-1/4" (133mm)
- Switch box included 4-1/2" x 4-9/16" x 2-1/2" (114 x 116 x 64mm) deep
- Armature plate thru-bolted to maintain consistent contact with magnet
- Adjusting screw on special heavy-duty armature allows for alignment of contact plate
- 9930M floor mount available
- Unit has test switch – may be ordered without switch if door will be pulled out of hold open very often
- Use key switch to release (by others)
- Substantial wall reinforcement required
- 2 year limited warranty

Electrical Data
- Voltage and current: 24VAC/DC .25 amp

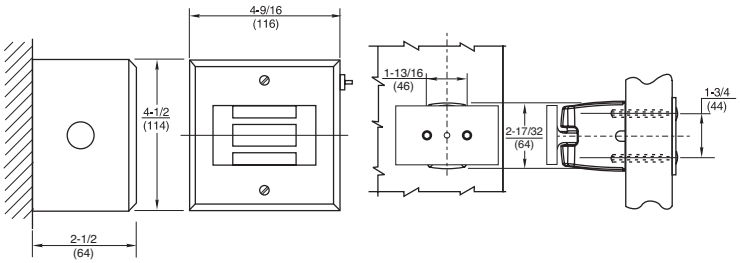

MODEL 994M

Application
- Wall mount
- Adjustable armature
- Concealed wiring
- Shipping weight: 2 lbs. (0.9 kg)

Features
- Total projection: 3-3/4" (95mm)
- Adjustable armature rotation up and down, back and forth for better alignment.
- Cannot be use with 900 base or spacers.
- Can be used without adjustment piece making it a model 997
- Mounting requirements: 2" x 4" x 2-1/2" (51 x 102 x 64mm) outlet box
- Wall must be properly reinforced and outlet box adequately fastened
- 2 year limited warranty

Compliance
- ANSI/BHMA A156.15, Grade 1
- ANSI/C00011

Electrical Data
- Voltage and current:
  120VAC, 60Hz., .020 amp
  24VAC/DC, 60Hz., .020 amp
  12VDC, .040 amp
- For 50-55 lbs. of holding force, specify voltage
  120VAC, 60Hz .017 amp
  24VAC, 60Hz .080 amp
  24VDC, .068amp
  12VDC, .180amp

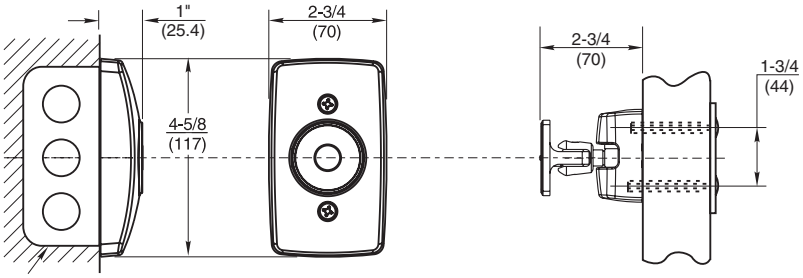

MODEL 996M

Application
- Wall mount
- Surface wiring
- Shipping weight: 3 lbs. (1.4 kg)

Features
- Total projection: 4-1/8" (105mm)
- Mounting requirements: 1-1/2" (38mm) deep adapter housing
- Wall must be properly reinforced
- 2 year limited warranty

Compliance
- ANSI/BHMA A156.15, Grade 1
- ANSI/C00011

Electrical Data
- Voltage and current:
  120VAC, 60Hz., .020 amp
  24VAC/DC, 60Hz., .020 amp
  12VDC, .040 amp
- For 50-55 lbs. of holding force, specify voltage
  120VAC, 60Hz .017 amp
  24VAC, 60Hz .080 amp
  24VDC, .068amp
  12VDC, .180amp

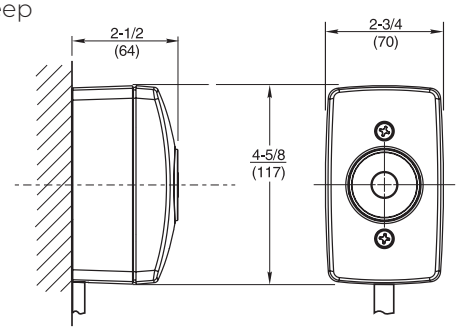

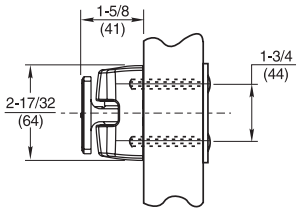

Experience a safer
and more open world

WALL MOUNTED

ELECTROMAGNETIC DOOR HOLDER/RELEASES

MODEL 997M

Application
- Wall mount
- Concealed wiring
- Shipping weight: 2 lbs. (0.9 kg)

Features
- Total projection: 2-5/8" (67mm)
- Mounting requirements: 2" x 4" x 1-3/4" (51 x 102 x 45mm) outlet box
- Wall must be properly reinforced and outlet box adequately fastened
- 2 year limited warranty

Compliance
- ANSI/BHMA A156.15, Grade 1
- ANSI/C00011

Electrical Data
- Voltage and current:
  120VAC, 60Hz., .020 amp
  24VAC/DC, 60Hz., .020 amp
  12VDC, .040 amp

- For 50-55 lbs. of holding force, specify voltage
  120VAC, 60Hz .017 amp
  24VAC, 60Hz .080 amp
  24VDC, .068amp
  12VDC, .180amp

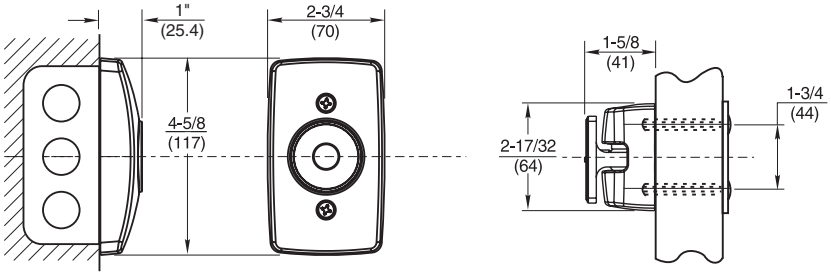

MODEL 998M

Application
- Wall mount
- Concealed wiring
- Shipping weight: 2-1/2 lbs. (1.1 kg)

Features
- Total projection: 3-5/8" (92mm)
- Mounting requirements: 2" x 4" x 1-3/4" (51 x 102 x 45mm) outlet box
- Wall must be properly reinforced and outlet box adequately fastened
- 2 year limited warranty

Compliance
- ANSI/BHMA A156.15, Grade 1
- ANSI/C00011

Electrical Data
- Voltage and current:
  120VAC, 60Hz., .020 amp
  24VAC/DC, 60Hz., .020 amp
  12VDC, .040 amp

- For 50-55 lbs. of holding force, specify voltage
  120VAC, 60Hz .017 amp
  24VAC, 60Hz .080 amp
  24VDC, .068amp
  12VDC, .180amp

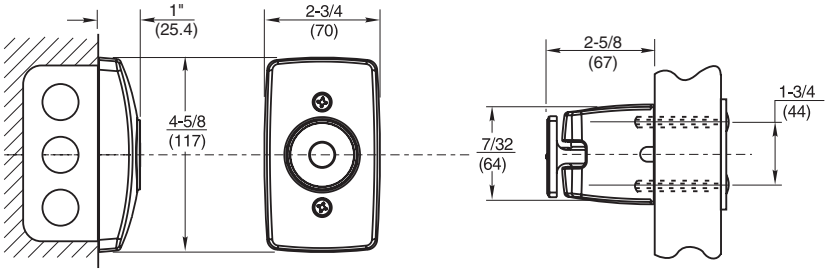

MODEL 999M

Application
- Universal mounting
- Shipping weight: 2-3/4 lbs. (1.2 kg)

Features
- Base plate; concealed wiring
- Total projection: 4-3/8" (111mm)
- Mounting requirements: 2" x 4" (51 x 102mm) outlet box; 4" (102mm) square box; 4" (102mm) octagonal box
- Wall must be properly reinforced and outlet box adequately fastened
- 2 year limited warranty

Compliance
- ANSI/BHMA A156.15, Grade 1
- ANSI/C00011

Electrical Data
- Voltage and current:
  120 VAC, 60 Hz., .020 amp
  24 VAC/DC, 60 Hz., .020 amp
  12 VDC, .040 amp

- For 50-55 lbs. of holding force, specify voltage
  120VAC, 60Hz .017 amp
  24VAC, 60Hz .080 amp
  24VDC, .068amp
  12VDC, .180amp

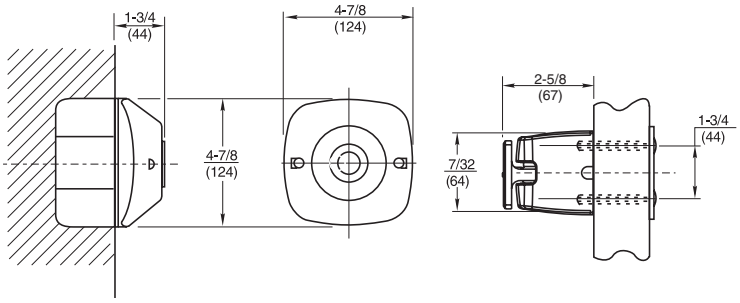

Experience a safer
and more open world

SCHEMATICS

ELECTROMAGNETIC DOOR HOLDER/RELEASES

SCHEMATICS

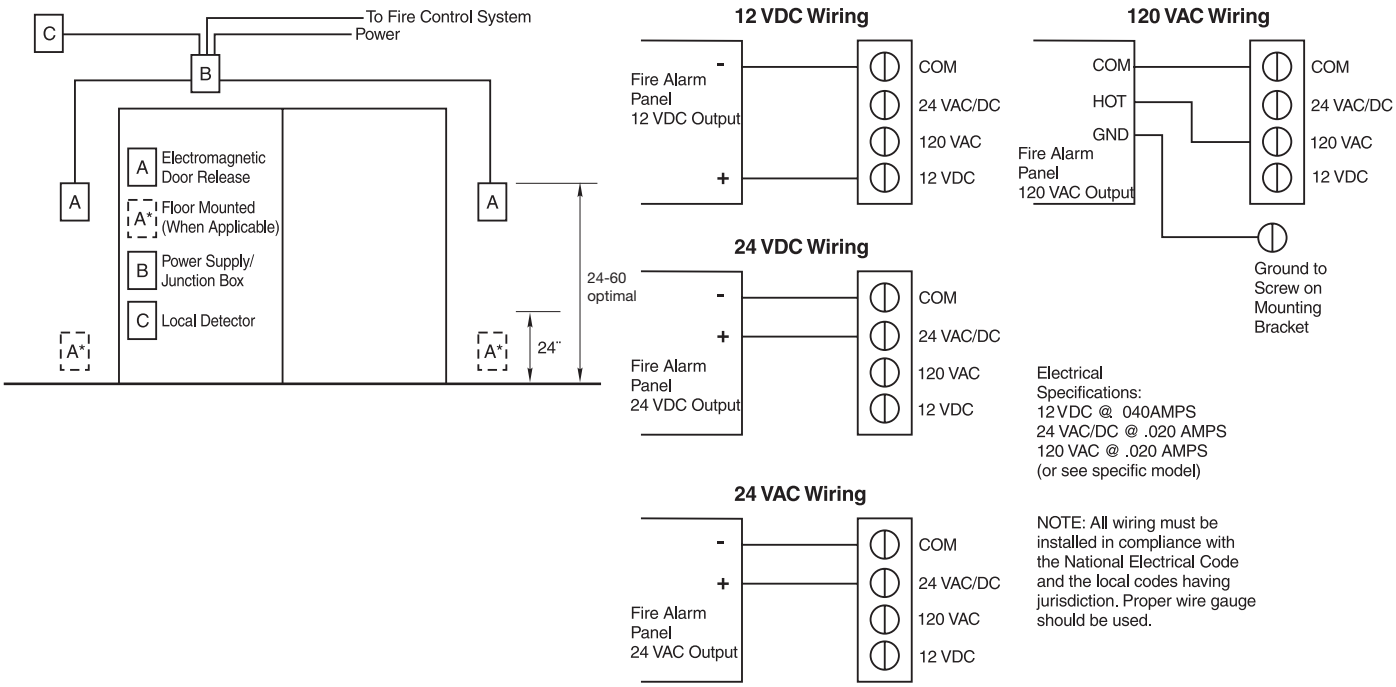

Operation Narrative

Doors are to be normally held open. The electromagnetic door releases will be energized with the voltage shown (at right) in the hardware set for this opening. Power shall be controlled by the fire control system. It will interrupt the power if alarmed, causing the doors to be released, thus allowing the door closers to close the doors. When power is restored the magnets will re-energize, permitting the doors to be manually returned to their held open position.

ACCESSORIES

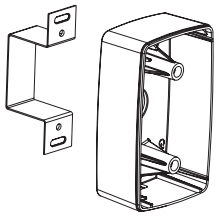

1-1/2" (38mm) Extension (for use only with Models 997M, 998M & 994M) Mounts behind wall cover.

XK996M
Part# 996631M-*

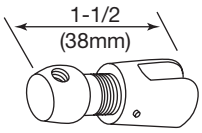

Base Unit Armature Extension Mounts between armature and contact plate.
Part# 900
Cannot be used with model 994M

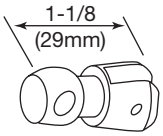

994M Swivel Armature (cannot be used with extension spacers)
Part# 900-3

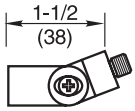

Armature Extension 90° Bend Part# 900-Z
Must be used with 900 base unit. Those two pieces will extend armature 3" longer than the contact plate.

Spacer lengths – must be used with 900 base

900-700

For dimensions, see chart below

900-600

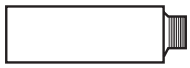

900-500

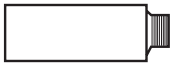

900-400

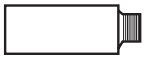

900-300

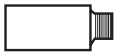

900-200

900-100

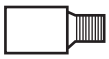

900-75

900-50

Extension pieces must be used in conjunction with 900 Base Unit

Part	Length
900-700	7"
900-600	6"
900-500	5"
900-400	4"
900-300	3"
900-200	2"
900-100	1"
900-75	3/4"
900-50	1/2"

**specify finish*

HOW TO ORDER

ELECTROMAGNETIC DOOR HOLDER/RELEASES

998M **120VAC** **689**

SERIES

980M	Floor Mounted
981M	Floor Mounted Back to Back Doors
989	Low Projection Wall Mounted
990M	Low Projection Wall Mounted
991M	Hazardous Location Wall Mounted
993M	High Hold Wall Mounted
9930M	High Hold Floor Mounted
994M	Wall Mounted Adjustable Armature
996M	Surface Mounted
997M	Wall Mounted
998M	Wall Mounted
999M	Universal Wall Mounted

VOLTAGE

120VAC
24VAC/DC
12VDC

Note:
Tri-Volt (120VAC, 24VAC/DC, 12VDC) is standard on models: 980M, 981M, 989, 990M, 994M, 996M, 997M, 998M and 999M. For 50-55 lbs of holding force on these models, specify model x 120VAC, 24VAC, 24VDC or 12VDC when ordering.

FINISHES

ANSI/BHMA (US)	Descripton
689 (US28)	Aluminum, painted
690 (US20)	Dark bronze, painted
691 (US10)	Light bronze, painted
693	Black, painted
696 (US4)	Gold , painted

USED WITH MODELS 980M, 981M

Floor Portion

(A) Magnet Housing Cover
980311M-* / 981311M-*

(B) Magnet Support Bracket
981309

(C) Gasket
980095M

(D) Tri-Volt Magnet Assembly
^996219-3V

(E) Magnet Housing Base
980312M-* / 981312M-*

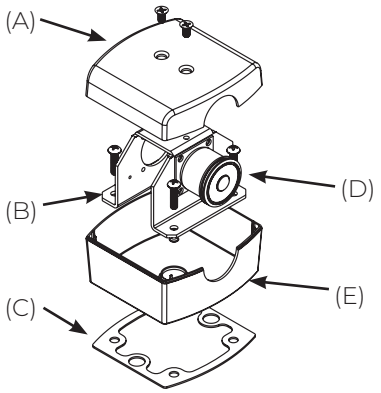

980M

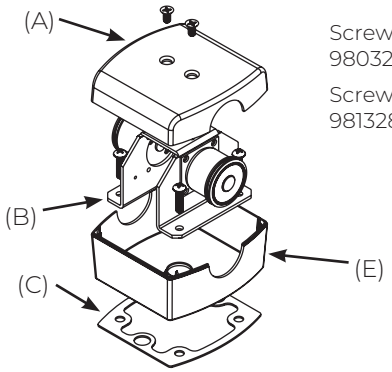

981M

Screw Kits

Screw Kit for 980M
980328-*

Screw Kit for 981M
981328-*

USED WITH MODELS 980M, 981M, 990M, 991M, 996M, 997M

Door Portion

(A) Backup Plate

(B) Door Armature Assembly
997510M-*

(C) Door Plate

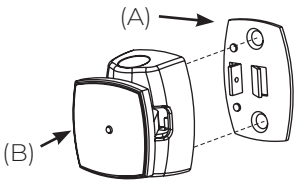

Surface Applied Concealed Mounting
Recommended for Solid Wood Doors Only

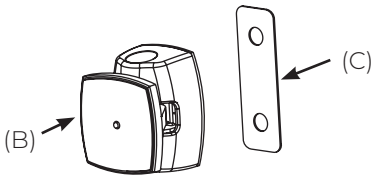

Thru Bolt Mounting
Recommended for Hollow Metal, Hollow Core or Composite Type Wood Doors

Note: backup plate and door plate are included in magnet screw kit

^ For voltages other than Tri-Volt, contact factory
** Specify finish*

PARTS DRAWINGS

ELECTROMAGNETIC DOOR HOLDER/RELEASES

USED WITH MODEL 991M

Wall Portion

Screw Kit for 991M: 990300-*

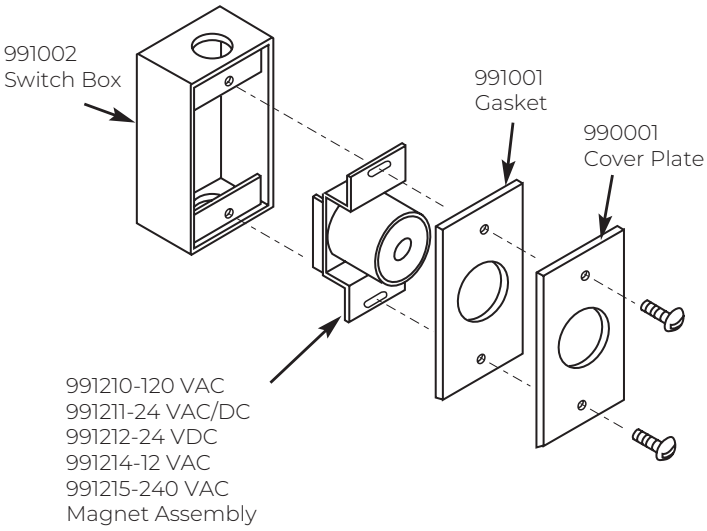

USED WITH MODEL 993M/9930M

Screw Kit for 993M: 993300-A

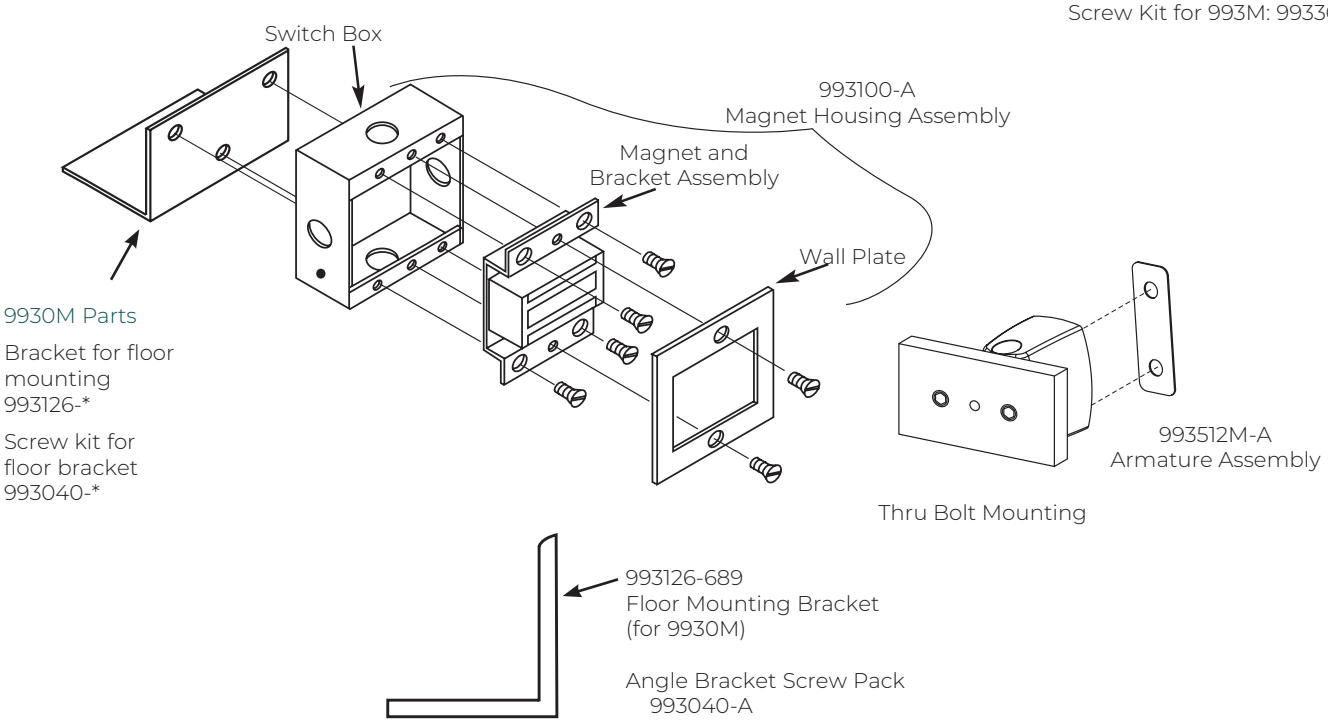

** Specify finish*

USED WITH MODELS 990M, 989

Wall Portion

(A) Magnet Bracket
990002

(B) Tri-Volt Magnet Assembly
^996219-3V

(C) Cover Plate
990001

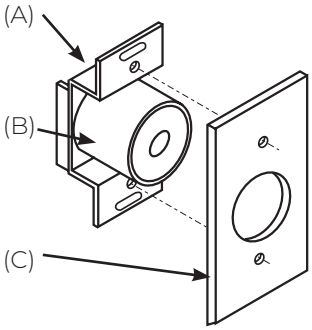

Screw Kits

Screw Kit for 990M
990300-*

USED WITH MODELS 998M, 999M

Door Portion

(A) Backup Plate

(B) Door Armature
998512M-*

(C) Door Plate

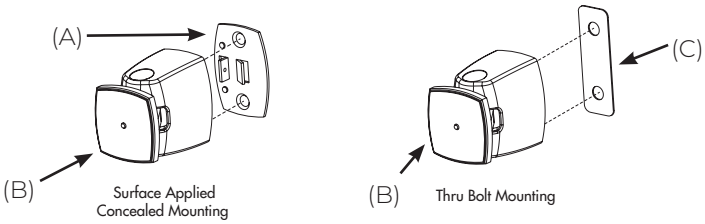

Note: backup plate and door plate are included in magnet screw kit

Screw Kits

See Screw Kit for 998M
998303-*

USED WITH MODEL 989

Door Portion

(A) Door Armature
Attachment screw
included in Kit.
444FM

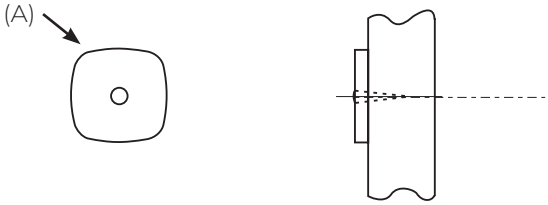

^ For voltages other than Tri-Volt, contact factory

** Specify finish*

PARTS DRAWINGS

ELECTROMAGNETIC DOOR HOLDER/RELEASES

USED WITH MODEL 994M

Door Portion

(A) Backup Plate

(B) Door Armature Assembly
994510M-*

(C) Door Plate

(D) Swivel Armature
900-3*

Note: backup plate and door plate are included in magnet screw kit

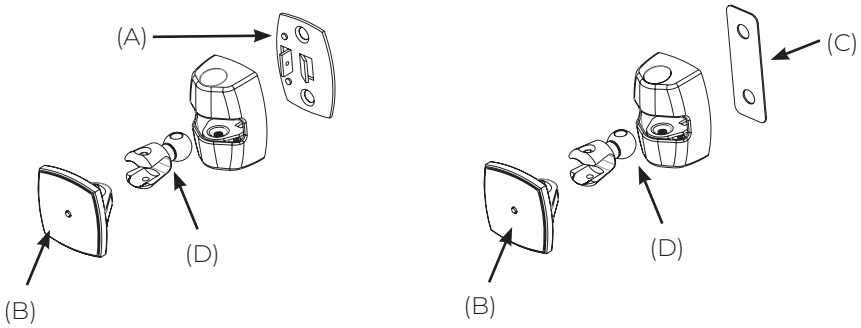

USED WITH MODELS 994M, 997M, 998M

Wall Portion

(A) Tri-Volt Magnet Assembly
998369-3V

(B) Wall Cover
998315M-*

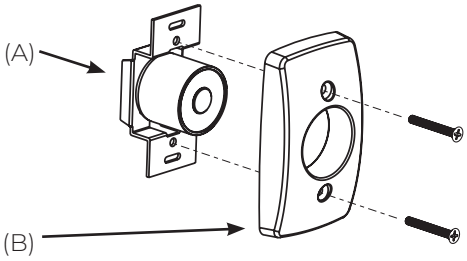

Screw Kits
Screw Kit for
994M/997M
998300-*

Screw Kits
Screw Kit for
998M
998303-*

USED WITH MODEL 996M

Wall Portion

(A) Surface Mounting Box
996501M-*

(B) Tri-Volt Magnet Assembly
996369-3V

(C) Wall Cover
998315M-*

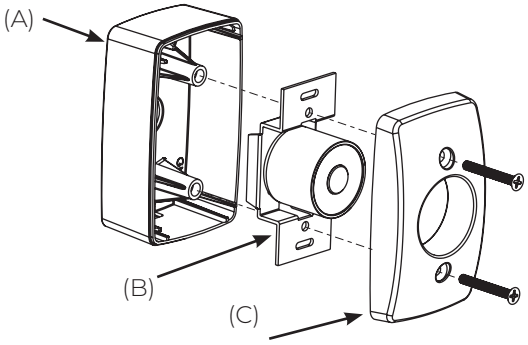

Screw Kits
Screw Kit for 996M
996325-*

^ For voltages other than Tri-Volt, contact factory
** Specify finish*

USED WITH MODEL 999M

Wall Portion

(A Base Plate
999105

(B) Wall Cover
999055-*

(C) Tri-Volt Magnet Assembly
996219-3V

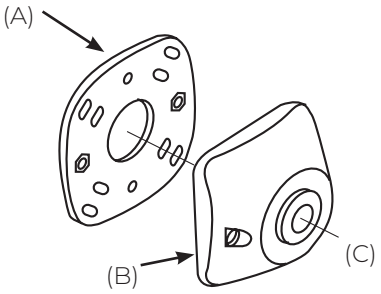

Screw Kits

Screw Kit for 999M
999318-*

^ For voltages other than Tri-Volt, contact factory
** Specify finish*

NOTES

ELECTROMAGNETIC DOOR HOLDER/RELEASES

The ASSA ABLOY Group is the global leader in access solutions. Every day, we help billions of people experience a more open world.

ASSA ABLOY Opening Solutions leads the development within door openings and products for access solutions in homes, businesses and institutions. Our offering includes doors, frames, door and window hardware, mechanical and smart locks, access control and service.

Since 1880, Norton Rixson door controls have been an integral part of schools, hospitals and businesses around the globe. When you need products and people that perform at the highest level, rely on Norton Rixson – From Open to Close.

NORTON RIXSON | WWW.NORTONRIXSON.COM
3000 Highway 74 East | Monroe, NC 28112 | Tel: 1 877 974 2255

ASSA ABLOY OPENING SOLUTIONS DOOR SECURITY SOLUTIONS CANADA | www.assaabloydss.ca
160 Four Valley Drive | Vaughan, Ontario, L4K 4T9 Canada | Tel: 800 461 3007

Copyright © 2001-2026, ASSA ABLOY Accessories and Door Controls Group, Inc. All rights reserved. Reproduction in whole or in part without the express written permission of ASSA ABLOY Accessories and Door Controls Group, Inc. is prohibited.

44044-03/26