Auxiliary Locks

Cabinet Locks, Deadlocks, Padlocks

An ASSA ABLOY Group brand

ASSA ABLOY

general information

introduction

Whether searching for a means of providing basic security or adhering to requirements of more sophisticated security systems, look to Yale® for a wide choice of auxiliary and special purpose locks designed to fit a wide range of applications.

Yale offers a complete line of high quality latchlocks, deadlocks, deadbolts and rim locks with standard and alternative rim cylinders. Cabinet locks, special purpose locks and padlocks round out a collection of products engineered to provide physical security and high levels of key control.

For over 160 years, Yale has been synonymous with superior locks. You can rely on Yale® auxiliary and special purpose locks to provide the highest level of performance and dependability.

warranty

All auxiliary locks carry a one-year mechanical warranty.

microshield®

Auxiliary locks are available with MicroShield® antimicrobial coating, refer to product listing for availablility.

MicroShield is a revolutionary hardware finish coating, using a silver ion based technology, which inhibits the growth of bacteria, algae, yeast, fungus, mold and mildew.

MicroShield is non-toxic and lasts for the lifetime of the finish to which it is applied. To order, suffix option code "YMS".

Note: *MicroShield*® coating may vary finish color from architectural standards. *MicroShield* is not intended as a substitute for traditional infection control programs such as hand hygiene or use of disinfectants. Coated product must still be cleaned to insure the surfaces will be free of destructive microbes. Yale makes no representations or warranties, express or implied, as to the efficacy of the *MicroShield* antimicrobial. A copy of the *MicroShield* warranty is available upon request.

contents

General Information 2
Auxiliary Latch 3
Cylindrical Deadbolts 4-7
Mortise Deadlocks 8-9
Padlocks 10-14
Padlock Chains 15
Auxiliary Rim Locks 16-21
Rim Lock Components 22
Cabinet Locks 23-24
Special Purpose Locks 25
Electrical Switch Cylinders 26
Ordering Information 27

finishes

Refer to sections for product finish availability.

ANSI/ BHMA Code	Finish Description
605	Bright Brass, Clear Coated
606	Satin Brass, Clear Coated
609	Satin Brass, Blackened, Satin Relieved, Clear Coated
611	Bright Bronze, Clear Coated
612	Satin Bronze, Clear Coated
613	Dark Oxidized Satin Bronze, Oil Rubbed [1]
613E	613E Dark Oxidized Satin Bronze - equivalent
616	Satin Bronze, Blackened, and Satin Relieved, Clear Coated
619	Satin Nickel Plated, Clear Coated
620	Satin Nickel Plated, Blackened, Satin Relieved, Clear Coated
625	Bright Chrome Plated
626	Satin Chrome Plated
629	Bright Stainless Steel
630	Satin Stainless Steel
693	Black Painted
722	Black Oxidized Bronze, Oil Rubbed [2]

1. New May 1, 2010
2. Formerly 613 prior to May 1, 2010

Finish available with MicroShield® antimicrobial coating, additional finishes by special application. Consult factory for availability.

Padlocks

Cylindrical Deadbolts

Cabinet Locks

Auxiliary Rim Locks

YSSL10 auxiliary latch

introduction

YSSL10 auxiliary latches are for use with Security Sidelite doors. This latch is also ideal for dutch door, communicating door and shallow closet applications.

The YSSL10 is a spring loaded latchbolt which is operated by a thumbturn on one side of the door and with no operation on the other. This latch is only recommended for areas with alternate exits.

ASSA ABLOY group companies CECO and CURRIES now offer Security SideLite doors and the YSSL10 offers a complete solution for this application. The Security SideLite door covers the SideLite window pane to provide privacy and to offer protection in possible emergency situations.

A.D.A.

The YSSL10 offers a compliant thumbturn.

fire listings

UL - cUL fire rated up to 3 hours.

Note: Any retrofit or other field modification to a fire rated opening can potentially impact the fire rating of the opening, and Yale Locks & Hardware makes no representations or warranties concerning what such impact may be in any specific situation. When retrofitting any portion of an existing fire rated opening, or specifying and installing a new fire-rated opening, please consult with a code specialist or local code official (Authority Having Jurisdiction) to ensure compliance with all applicable codes and ratings.

backset

2-3/4" (70mm) only.

latchbolt

1/2" (13mm) brass throw.

door thickness

1-3/4" (44mm) only.

front

2-1/4" x 1" (57mm x 25mm) flat front.

handing

Functions are non-handed and easily field reversible.

finishes

ANSI/ BHMA Code	Finish Description
605	Bright Brass, Clear Coated
606	Satin Brass, Clear Coated
612	Satin Bronze, Clear Coated
613	Dark Oxidized Satin Bronze, Oil Rubbed[1]
625	Bright Chrome Plated
626	Satin Chrome Plated MicroShield
722	Black Oxidized Bronze, Oil Rubbed[2]

1. New May 1, 2010
2. Formerly 613 prior to May 1, 2010

MicroShield Finish available with MicroShield® antimicrobial coating, additional finishes by special application. Consult factory for availability.

Security SideLite offered through CECO and CURRIES

strike

1-1/4" (32mm) curved lip standard (model number 371).

Model No. 371 T-Strike

1-1/4" curved lip supplied standard. 1", 1-1/2", 1-3/4", and 2" curved lip lengths available by special order. Wrought strike box supplied.

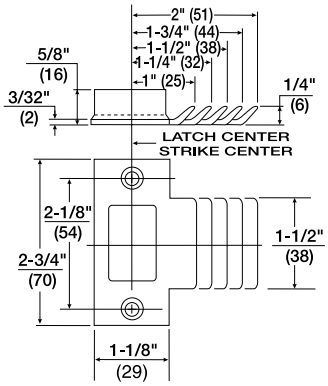

D series cylindrical deadbolts

introduction

Yale® D series deadbolts are the ideal choice for a wide variety of commercial applications where consistent quality, ease of use and installation are required. The D100 series is certified to ANSI/BHMA Grade 1 standards and the D200 series is certified to ANSI/BHMA Grade 2 standards. Both series are UL fire-listed for all functions ensuring reliability and peace of mind.

ansi/bhma

D100
Certified ANSI/BHMA A156.5 Grade 1.

D200
Certified ANSI/BHMA A156.5 Grade 2.

deadbolt

1" (25mm) throw, solid steel deadbolt with hardened, free spinning, steel pin insert.

fronts

2-1/4" x 1" (57mm x 25mm) front and 1-1/8" (29mm) latch front filler supplied standard with each D series deadbolt.

strikes

2-3/4" x 1-1/8" (70mm x 29mm) metal and wood door strikes with strike reinforcement supplied standard.

handing

Functions are non-handed and easily field reversible.

warranty

The D series deadbolts carry a one-year mechanical warranty.

backset

The D series deadbolts are available with either 2-3/4" (70mm) or 2-3/8" (60mm) backset.

door thickness

Standard for 1-3/8" (35mm) to 1-3/4" (44mm) thick doors.

fire listings

D series deadbolts, when used in conjunction with the primary latching device, are UL - cUL listed for use with Classified steel covered composite or hollow metal doors rated up to and including 3 hours; wood and plastic covered composite doors rated up to and including 1-1/2 hours; and wood core doors rated for 20 minutes.

Note: Any retrofit or other field modification to a fire rated opening can potentially impact the fire rating of the opening, and Yale Locks & Hardware makes no representations or warranties concerning what such impact may be in any specific situation. When retrofitting any portion of an existing fire rated opening, or specifying and installing a new fire-rated opening, please consult with a code specialist or local code official (Authority Having Jurisdiction) to ensure compliance with all applicable codes and ratings.

installation

Can be installed on doors prepared to ANSI/BHMA A156.115 specifications using a simple bored-hole installation for square or beveled doors, opening in or out.

finishes

ANSI/ BHMA Code	Finish Description
605	Bright Brass, Clear Coated
606*	Satin Brass, Clear Coated
612	Satin Bronze, Clear Coated
613	Dark Oxidized Satin Bronze, Oil Rubbed
613E	613E Dark Oxidized Satin Bronze - equivalent
619	Satin Nickel Plated, Clear Coated
625	Bright Chrome Plated
626*	Satin Chrome Plated

*Cylinders provided in these finishes only.

concealed interior screws

Several SFIC functions feature concealed interior screws. The control key is required in order to access the attaching screws. See page 5 for available functions.

visual indicator

D series Grade 2 deadbolts offer a visual occupancy indicator. "In Use" or "Vacant" is displayed depending on whether deadbolt is thrown or retracted. Override key included for access during emergency situations.

D series cylindrical deadbolts

D100

D111 & D112 B-D171 & B-D172*	D121 & D122**	D131 & D132	D141 & D142	D151 & D152	D161 & D162 B-D181 & B-D182*
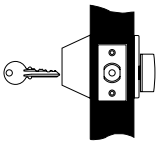	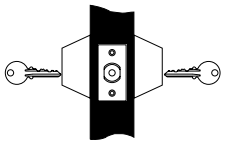	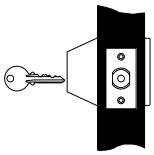	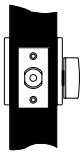	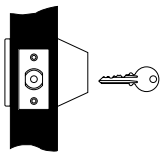	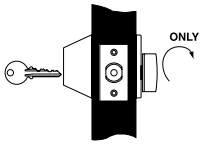
Cylinder x Thumbturn: Deadbolt operated by key outside, thumbturn inside.	**Cylinder x Cylinder:** Deadbolt operated by key outside, key inside.	**Cylinder x Blank Rose:** Deadbolt operated by key outside. Blank rose with exposed screws inside.	**Blank Plate x Thumbturn:** Deadbolt operated by thumbturn inside only.	**Blank Plate x Cylinder:** Deadbolt operated by key inside only	**Cylinder x Classroom Thumbturn:** Deadbolt operated by key outside, deadbolt retracted by thumbturn inside. Thumbturn will not project deadbolt.

*Concealed interior screws. Available SFIC only.
**SFIC version features concealed interior screws.

D200

D211 & D212	D221 & D222**	D231 & D232	D241 & D242	D251 & D252	D261 & D262	D291 & D292
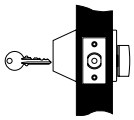	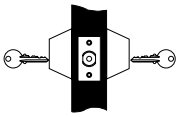	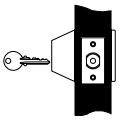	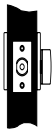	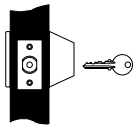	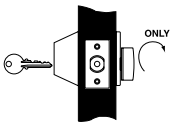	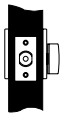
Cylinder x Thumbturn: Deadbolt operated by key outside, thumbturn inside.	**Cylinder x Cylinder:** Deadbolt operated by key outside, key inside.	**Cylinder x Blank Rose:** Deadbolt operated by key outside. Blank rose with exposed screws inside.	**Blank Plate x Thumbturn:** Deadbolt operated by thumbturn inside only.	**Blank Plate x Cylinder:** Deadbolt operated by key inside only	**Cylinder x Classroom Thumbturn:** Deadbolt operated by key outside, deadbolt retracted by thumbturn inside. Thumbturn will not project deadbolt.	**Occupancy Indicator x Thumbturn** Deadbolt operated by thumbturn inside, emergency override key outside. Outside indicator displays "In Use" when deadbolt thrown or "Vacant" when deadbolt retracted.

model numbers

Model Numbers		ANSI (Grade 1 / Grade 2)	Function Description	Backset
D100	D200			
D111 or B-D171	D211	E2151 / E2152	Cylinder x Thumbturn	2-3/8"
D112 or B-D172	D212			2-3/4"
D121	D221	E2141 / E2142	Cylinder x Cylinder	2-3/8"
D122	D222			2-3/4"
D131	D231	E2161 / E2162	Cylinder x Blank Rose	2-3/8"
D132	D232			2-3/4"
D141	D241	E2191 / E2192	Blank Plate x Thumbturn	2-3/8"
D142	D242			2-3/4"
D151	D251	E2101 / E2102	Blank Plate x Cylinder	2-3/8"
D152	D252			2-3/4"
D161 or B-D181	D261	E2171 / E2172	Cylinder x Classroom Thumbturn	2-3/8"
D162 or B-D182	D262			2-3/4"
N/A	D291	N/A	Occupancy Indicator x Thumbturn	2-3/8"
N/A	D292			2-3/4"

cylinders/keying

fixed core

Illustration	Type	Model Number	Number of Pins
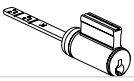	Cylinder for use with DX11, DX12, DX31, DX32, DX51, DX52, DX61, DX62. Includes breakoff tailpiece.	1807	6
	Cylinder for use with DX21, DX22. Includes optional tailpiece for 1-3/8" thick doors.	1808	6

Note: For 'X' in model number, use '1' for D100 Series and '2' for D200 Series.

interchangeable core

Type	Model Number	Number of Pin
Large Format Interchangeable Core	1210	6
Large Format Interchangeable Core	1220	7
Security Large Format Interchangeable Core	5210	6
Security Large Format Interchangeable Core	5220	7
Yale® KeyMark® Large Format Interchangeable Core	K800	6 or 7 (Specify)
Yale® KeyMark® Small Format Interchangeable Core	K600	6 or 7 (Specify)

K800 Shown

K600 Shown

Note: Large Format IC core available for D100 series only. Specify deadbolt model number x core model number. i.e. D112 x 1210 or D112 x 5210

Keying:
All cylinders furnished standard 6-pin, keyed random, pinned to *Yale* .019" specification. Each deadbolt furnished with two nickel silver keys.

Options:
Cylinders available 0-bitted, keyed alike, master keyed or construction master keyed upon request. (Yale® KeyMark® cylinders not available 0-bitted.)

competitor keyway cylinders/cores

Illustration	Type	Model Number	Number of Pins
	Best® Keyway Core. Available keyed random, master keyed or uncombinated. Specify keyway A, B, C, D, E, F, G, H, J, K, L or M.	A600	6 or 7 (Specify)
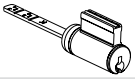	Schlage® "C" Keyway Cylinder. For use with DX11, DX12, DX31, DX32, DX51, DX52, DX61, DX62. Includes breakoff tailpiece. Available 0-bitted or keyed random.	2807-C	6
	Schlage® "C" Keyway Cylinder. For use with DX21, DX22. Includes optional tailpiece for 1-3/8" thick doors. Available 0-bitted or keyed random.	2808-C	6
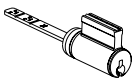	Corbin Russwin "L4" Keyway Cylinder. Available keyed random.	3806 x L4	6
	Corbin "60" Keyway Cylinder. Available keyed random.	3806 x 60	6
	Russwin "D1" Keyway Cylinder. Available keyed random.	3806 x D1	6
	Sargent "LA" Keyway Cylinder. Available keyed random.	3806 x LA	6
	Schlage® "E" Keyway Cylinder. Available keyed random.	3806 x E	6

Note: 3806 cylinders are supplied with applicable tailpieces that are needed operate all D Series functions. These cylinders are not ANSI/BHMA certified.

small format interchangeable core

Cylinder Type	Prefix	Ordering Example
SFIC (Accepts all Small Format Interchangeable Cores) 6- or 7-pin.	B	B-D112 x 626 or B-D212 x 626

Available for D100 and D200 series deadbolts.

D series cylindrical deadbolts

deadbolt assemblies

Model No.	Backset	Throw	Front
D34	2-3/4" (70mm)	1" (25mm)	2-1/4" x 1" (57mm x 25mm)
D38	2-3/8" (60mm)	1" (25mm)	2-1/4" x 1" (57mm x 25mm)

Note: 1-1/8" (29mm) Front filler supplied standard with all fronts.

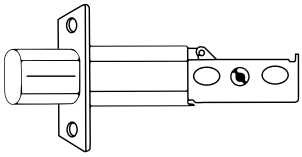

strikes

Each D series deadbolt furnished standard with metal frame strike, wood frame strike and strike reinforcement.

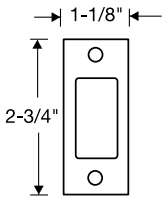

Model D243
Metal Frame Strike

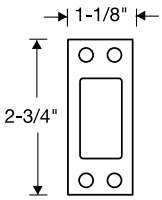

Model D243
Wood Frame Strike

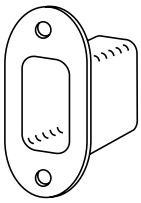

Model D244
Strike Reinforcement

Note: Model D243 is a strike packet which includes both wood and metal frame strikes and corresponding screws.

how to order

Function	Hand	Cylinder	Door Thickness	Keying	Finish
D212	RH	1807	1-3/4"	KR	626

Deadbolt Model Number Description:			
D	**X**	**X**	**X**
Model Number	Grade	Function	Backset “1” = 2-3/8" “2” = 2-3/4"

350 series mortise deadlocks

application
Mortise installation for 1-3/4" (44mm) doors, unless otherwise specified. 3" thick doors maximum for thumbturn functions.

backset
2-3/4" (70mm) only.

door prep
The 350 series mortise deadlocks conform to ANSI/BHMA Specifications A156.115 which cover hardware preparations for steel doors and steel frames and A156.115-W which cover hardware preparations for wood doors with wood or steel frames.

fire listings
350 series deadlocks, when used in conjunction with the primary latching device, are UL - cUL listed for use on fire doors having a rating up to and including 3 hours. In addition, the 350 series are cUL listed for use on wood doors having a rating up to and including 90 minutes.

Note: Any retrofit or other field modification to a fire rated opening can potentially impact the fire rating of the opening, and Yale Locks & Hardware makes no representations or warranties concerning what such impact may be in any specific situation. When retrofitting any portion of an existing fire rated opening, or specifying and installing a new fire-rated opening, please consult with a code specialist or local code official (Authority Having Jurisdiction) to ensure compliance with all applicable codes and ratings.

thumbturn assemblies
Used with all 350 series locks that have a thumbturn.

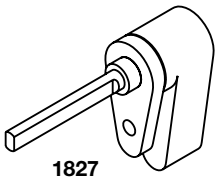

1827

handing
Functions are non-handed and easily field reversible.

deadbolt
Laminated stacked steel with hardened pin, 1" (25mm) throw.

front
4-5/8" x 1-1/8" (117mm x 29mm) Brass, bronze or stainless steel. Adjustable to accommodate flat or beveled-edged doors (bevel adjustment 1/8" in 2" (3mm in 51mm).

case
Heavy wrought steel, zinc plated and dichromated.

finishes
See page 2 for available finishes.

strike
3-1/2" x 1-1/8", model number 30S provided standard. ANSI/BHMA A156.115 strike 4-7/8" x 1-1/4", model number 545N optional. Optional wrought box model number 31S available to order.

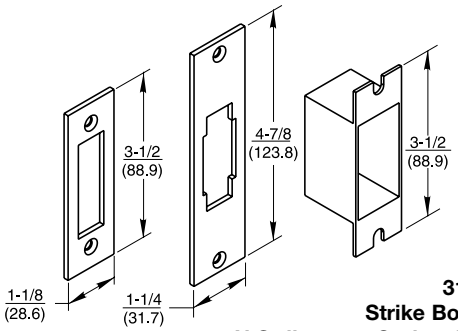

30S Strike Standard

545N Strike Optional

31S Strike Box Optional

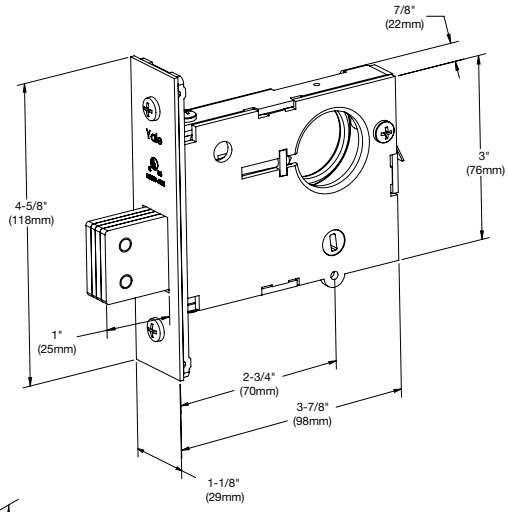

Dimensions are shown in inches (millimeters).

350 series mortise deadlocks

functions

351

Deadbolt operated by key outside and inside.

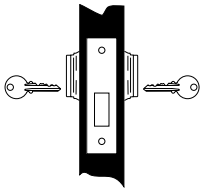

Outside Inside

352

Deadbolt operated by key outside and thumbturn inside.

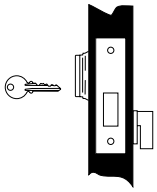

Outside Inside

353

Deadbolt operated by key outside only. No inside operation.

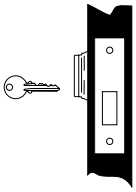

Outside Inside

354

Deadbolt operated by thumbturn inside only. No outside operation.

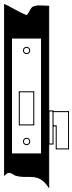

Outside Inside

356

Deadbolt operated by key outside and inside. Inside thumbturn will retract deadbolt, but will not project it. Uses classroom function mortise lockbody.*

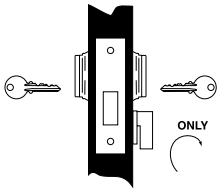

Outside Inside

357

Deadbolt operated by key outside. Inside thumbturn will retract deadbolt, but will not project it. Uses classroom function mortise lockbody.*

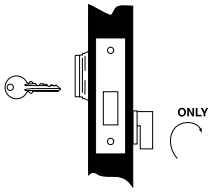

Outside Inside

*351, 352, 353 and 354 use lockbody p/n 50-0352-0001-999
356 and 357 use lockbody p/n 50-0357-0001-999

cylinders

1-1/8", 6-pin fixed core mortise cylinder, model number 2153 x 2160 cam provided standard.

Model Number	Description	Length	Cam	Collar*
2153	6-pin fixed core	1-1/8"	2160	1767.250
2153	7-pin fixed core	1-1/4"	2160	1765.375
2196	6-pin LFIC complete	1-1/2"	2160	1765.656
2197	7-pin LFIC complete	1-11/16"	2160	1765.844
5153	6-pin security fixed core	1-1/8"	2160	1765.250
5153	7-pin security fixed core	1-1/4"	2160	1765.375
5196	6-pin security LFIC complete	1-1/2"	2160	1765.656
5197	7-pin security LFIC complete	1-11/16"	2160	1765.844
K100	6-or 7-pin Yale® KeyMark® fixed core	1-1/8"	KC1	1765.312
K820	6-pin *Yale KeyMark* LFIC complete	1-1/2"	KC1	1765.656
K820	7-pin *Yale KeyMark* LFIC complete	1-11/16"	KC1	1765.844
K620	6-pin *Yale KeyMark* SFIC complete	1-1/4"	KC1	1765.375
K620	7-pin *Yale KeyMark* SFIC complete	1-3/8"	KC1	1765.563
A620	6-pin Best® keyway SFIC complete	1-1/4"	KC1	1765.375
A620	7-pin Best® keyway SFIC complete	1-3/8"	KC1	1765.563

***1-3/4" thick doors. For other door thicknesses, contact Technical Support. Collar must be specified when cylinder ordered separately.**

800 series padlocks

standard features

Case: Extra-heavy brass casting, clear coated finish.

Shackle: Hardened steel, triple-plated for rust resistance, chrome finish.

Shackle Locking: Two spring-loaded bolts at heel and toe of shackle.

Keying: Pin tumbler cylinder, 5-pins standard, 6- or 7-pins where required. Keyed Different (KD) standard, available Keyed Alike (KA), Master Keyed (MK), Grand Master Keyed (GMK) or higher levels of keying.

Keys: Two keys supplied with each padlock.

optional features

Brass Shackles: Available in all listed shackle variations. Suffix “B” to the Model No. (i.e. 840B).

Chains: 9" chains available with clevis around shackle or riveted to case. To order with padlocks specify suffix:

- for clevis around shackle
  - "S42A" = brass chain
  - "S42S" = steel chain
- for clevis riveted to case
  - "C42A" = brass chain
  - "C42S" = steel chain

See page 15 for chains ordered separately.

Unassembled Padlocks: For keying in the field. Specify the padlock number , x 0-bittings x key section x number of pins (i.e. 870 x 0-bittings x GA x 6-pins). Padlock is assembled, but loose rivets permit easy disassembly. Padlocks are furnished with two ringed key blanks.

Key Retaining: Suffix padlock model number with "KR" (i.e. 870KR).

dimensions and details

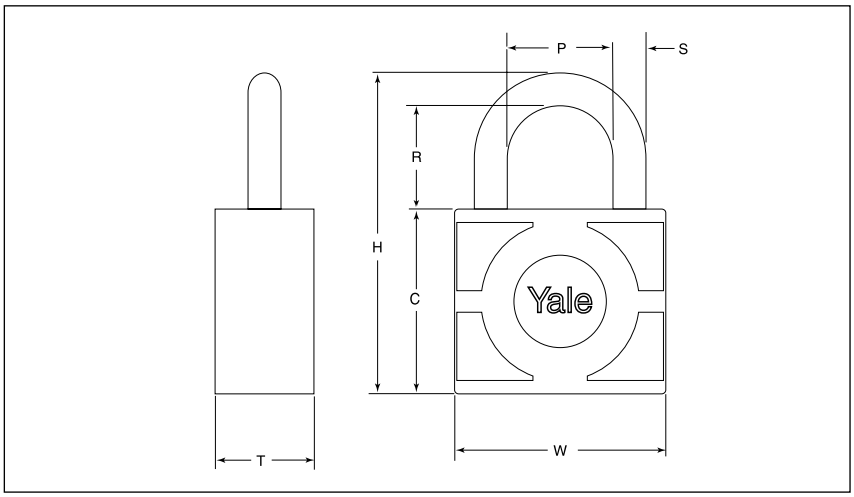

Model Number	Case			Shackle			Overall Height	Plug Diameter
	Width	Height	Thickness	Vertical Clearance	Diameter	Horizontal Clearance		
	W	C	T	R	S	P	H	
870	2-5/8" (67mm)	1-15/16" (49mm)	1" (25mm)	1-1/4" (32mm)	7/16" (11mm)	1-5/16" (49mm)	3-3/4" (95mm)	.51" (13mm)

Note: All dimensions are in inches and are to the nearest 1/16" (2mm). Dimensions are nominal.

PD400 series padlocks

features

Case: Chrome Plated Steel

Shackle: High strength molybdenum alloy steel. Rust resistant with a chrome finish. Optional brass shackles available.

Shackle Diameter: 5/16" (8mm)

Shackle Locking: Two hardened steel balls at heel and toe of shackle.

Extended Shackles: Optional shackles with 2" and 3" vertical clearance are available to order.

Chains: Optional 9" chains available with clevis around shackle. To order with padlocks specify suffix:

- "S42A" = brass chain
- "S42S" = steel chain

See page 15 for chains ordered separately.

Keying: 6-pin only. Furnished standard with Yale 1801 type component cylinder; available KA, KD or master keyed only (not available 0-bitted or unassembled). Not re-keyable.

Keys: Two nickel silver change keys supplied with each padlock.

dimensions and details

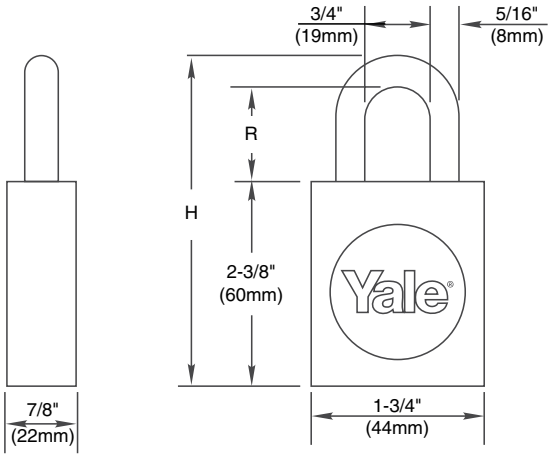

Model Numbers		Description	Vertical Clearance (R)	Overall Height (H)	Pins
Molybdenum Steel Shackle	Brass Shackle				
PD416	PD416B	Fixed Core	1-1/16" (27mm)	3-3/4" (95mm)	6
PD2416	PD2416B	Fixed Core	2" (51mm)	4-3/8" (111mm)	6
PD3416	PD3416B	Fixed Core	3" (76mm)	5-3/8" (137mm)	6

Note: All dimensions are in inches and are to the nearest 1/16" (2mm). Dimensions are nominal.

PD500 series padlocks

Available in fixed core, large format interchangeable core (LFIC), and small format interchangeable core (SFIC).

features

Case: Solid Brass

Shackle: High strength molybdenum alloy steel. Rust resistant with a chrome finish. Optional brass shackles available.

Shackle Diameter: 3/8" (10mm) or 5/16" (8mm)

Shackle Locking: Two hardened steel balls at heel and toe of shackle.

Extended Shackles: Optional shackles with 2" and 3" vertical clearance are available to order.

Chains: Optional 9" chains available with clevis around shackle or riveted to case. To order with padlocks specify suffix:

- for clevis around shackle
  - "S42A" = brass chain
  - "S42S" = steel chain
- for clevis riveted to case
  - "C42A" = brass chain
  - "C42S" = steel chain

See page 15 for chains ordered separately.

Keys: Two nickel silver change keys supplied with each padlock. Control key quantity must be specified for interchangeable core.

Dimensions and Details:

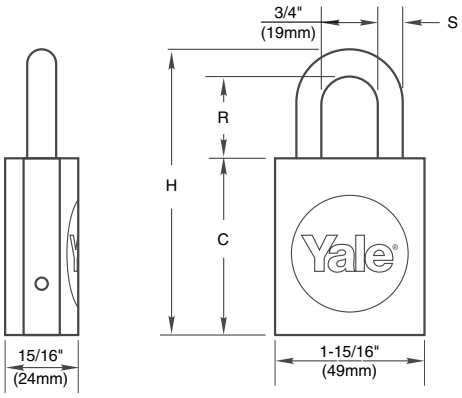

Model Numbers		Description	Case Height (C)	Vertical Clearance (R)	Diameter (S)	Overall Height (H)	Pins
Molybdenum Steel Shackle	Brass Shackle						
PD514	PD514B	LFIC	2-5/16" (59mm)	1-1/16" (27mm)	5/16" (8mm)	3-3/4" (95mm)	6
PD2514	PD2514B	LFIC		2" (51mm)		4-3/8" (111mm)	6
PD3514	PD3514B	LFIC		3" (76mm)		5-3/8" (137mm)	6
PD515	PD515B	SFIC	2-1/4" (57mm)	1-1/16" (27mm)		3-5/8" (91mm)	6 or 7
PD2515	PD2515B	SFIC		2" (51mm)		4-9/16" (115mm)	6 or 7
PD3515	PD3515B	SFIC		3" (76mm)		5-5/8"(142mm)	6 or 7
PD516	PD516B	Fixed Core	2-5/16" (59mm)	1-1/16" (27mm)		3-3/4" (95mm)	6
PD2516	PD2516B	Fixed Core		2" (51mm)		4-3/8" (111mm)	6
PD3516	PD3516B	Fixed Core		3" (76mm)		5-3/8" (137mm)	6
PD524	PD524B	LFIC		1-1/16" (27mm)	3/8" (10mm)	3-3/4" (95mm)	6
PD2524	PD2524B	LFIC		2" (51mm)		4-3/8" (111mm)	6
PD3524	PD3524B	LFIC		3" (76mm)		5-3/8" (137mm)	6
PD534	PD534B	LFIC		1-1/16" (27mm)		3-3/4" (95mm)	7
PD2534	PD2534B	LFIC		2" (51mm)		4-3/8" (111mm)	7
PD3534	PD3534B	LFIC		3" (76mm)		5-3/8" (137mm)	7
PD525	PD525B	SFIC		1-1/16" (27mm)		3-3/4" (95mm)	6 or 7
PD2525	PD2525B	SFIC		2" (51mm)		4-3/8" (111mm)	6 or 7
PD3525	PD3525B	SFIC		3" (76mm)		5-3/8" (137mm)	6 or 7
PD526	PD526B	Fixed Core		1-1/16" (27mm)		3-3/4" (95mm)	6
PD2526	PD2526B	Fixed Core		2" (51mm)		4-3/8" (111mm)	6
PD3526	PD3526B	Fixed Core		3" (76mm)		5-3/8" (137mm)	6

Note: All dimensions are in inches and are to the nearest 1/16" (2mm). Dimensions are nominal.

PD500 series padlocks

Keying: Padlocks available 0-bitted, uncombinated, keyed alike keyed different or master keyed. *Note: Yale KeyMark cylinders and cores are not available 0-bitted.*

LFIC – Padlocks furnished standard less core. Available for Yale 6- or 7-pin large format interchangeable cores. Specify core and keying required.

Cores:

Model Number	Description
1210	6-pin Conventional
1220	7-pin Conventional
5210	6-pin Security
5220	7-pin Security
K800	6- or 7-pin Yale® KeyMark® (Specify number of pins required)

SFIC – Padlocks furnished standard less core. Available for 6- or 7-pin small format interchangeable core. Specify core and keying if required.

Cores:

Model Number	Description
K600	6- or 7-pin Yale® KeyMark® (Specify number of pins required)
A600	6- or 7-Pin Best® Keyway (Specify keyway and number of pins required)

Fixed Core – Available in 6-pin only. Furnished standard with Yale 1801 type component cylinder for easy re-keying in field. Security and Yale® KeyMark® cylinders available to order. Less cylinder also available, specify "x LC". Padlocks provided less cylinder are furnished with cylinder sleeve and adaptor.

Cylinders:

Model Number	Description
1801	Standard
5801	Security
K400	Yale® KeyMark®
2801	Schlage® C Keyway (0-bitted or keyed random only)

Cylinder and Sleeve	
Unassembled	Assembled

PD600 series

features

Case: Solid brass

Shackle: High strength molybdenum alloy steel. Rust resistant with a chrome finish. Optional brass shackles available.

Shackle Diameter: 5/16" (8mm)

Shackle Locking: Two hardened steel balls at heel and toe of shackle.

Extended Shackles: Optional shackles with 2" and 3" vertical clearance are available to order.

Chains: Optional 9" chains available with clevis around shackle or riveted to case. To order with padlocks specify suffix:

- for clevis around shackle
  - "S42A" = brass chain
  - "S42S" = steel chain
- for clevis riveted to case
  - "C42A" = brass chain
  - "C42S" = steel chain

See page 15 for chains ordered separately.

Keying: 6-pin only. Furnished standard with Yale 1801 type component cylinder; available KA, KD or master keyed (not available 0-bitted or unassembled). Not re-keyable.

Keys: Two nickel silver change keys supplied with each padlock.

Note: The PD616 padlocks are key retaining. This means that the key cannot be removed from the padlock while the shackle is in the "unlocked" position. The key can only be removed if the shackle is in the "locked" position.

dimensions and details

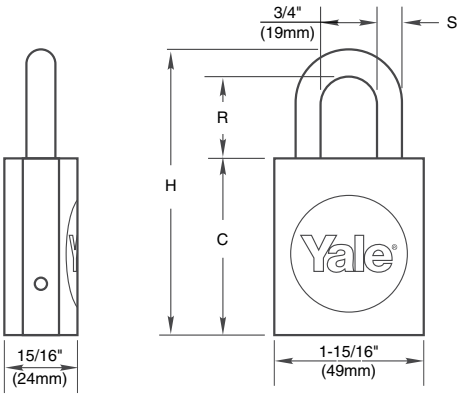

Model Numbers		Description	Vertical Clearance (R)	Overall Height (H)	Pins
Molybdenum Steel Shackle	Brass Shackle				
PD616	PD616B	Fixed Core	1-1/16" (27mm)	3-3/4" (95mm)	6
PD2616	PD2616B	Fixed Core	2" (51mm)	4-3/8" (111mm)	6
PD3616	PD3616B	Fixed Core	3" (76mm)	5-3/8" (137mm)	6

Note: All dimensions are in inches and are to the nearest 1/16" (2mm). Dimensions are nominal.

padlock chains

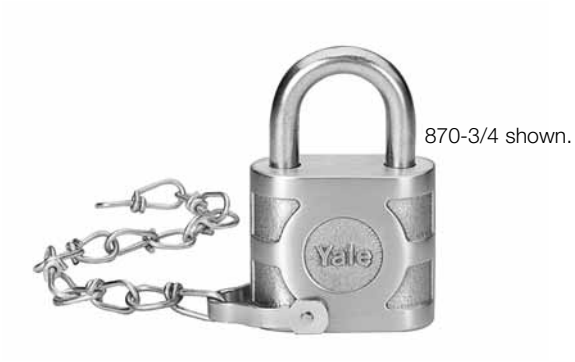

870-3/4 shown.

42A and 42S chains riveted to case.
Specify suffix "C42A" or "C42S".

Model No.	Material	Minimum Length	Shackle Diameter	Gauge Size
42A	Brass	9" (229mm)	9/32"–5/16" (7mm-8mm)	15
42S	Steel	9" (229mm)	9/32"–5/16" (7mm-8mm)	15

Chains are used with 800, PD400, and PD500 series padlocks. All chains are double-link type.

42A and 42S chains with clevis.
Specify suffix "S42A" or "S42S".

security latchlock 80

operation

Outside: Furnished standard with 5-pin rim cylinder 1109E.
Inside: Bolt can be deadlocked or held back by slide button, rendering the lock inoperable by key or knob.

Model Numbers	
80	Boxed
V80	Visual Pack

dimensions and details

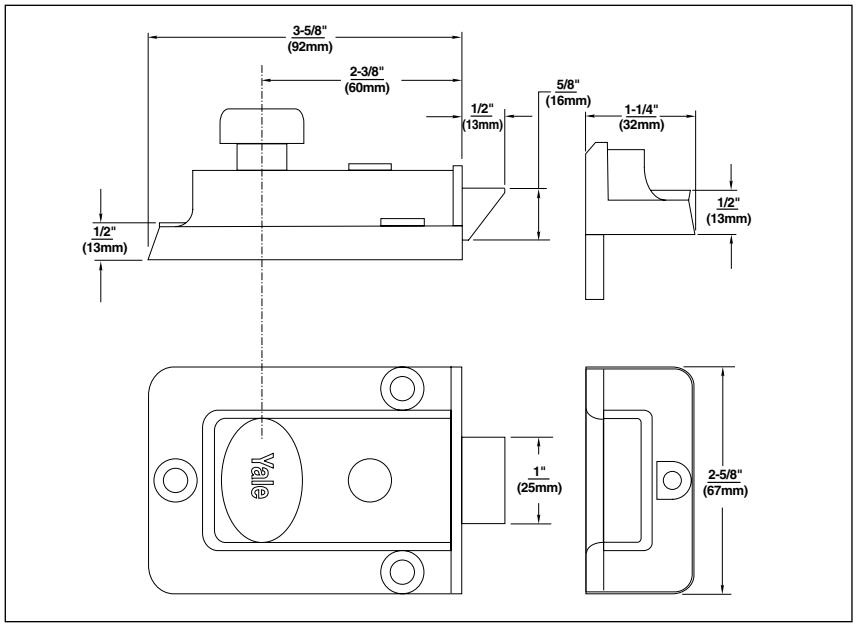

technical information

Description	80
Backset	2-3/8" (60mm)
Material	Zinc Alloy
Springbolt Length	1/2" (13mm)
Reversible Latchbolt	Yes, order #8RB Strike
Cylinder	1109E - Brass 5-pin with anti-pick mushroom drivers
Case Finishes	Enameled Brasslux only
Cylinder Finish	Brass
2 Keys	RB8
Door Thickness	1-1/4" to 2-1/4" (32mm-57mm)

Dimensions are shown in inches (millimeters).

security latchlock 88

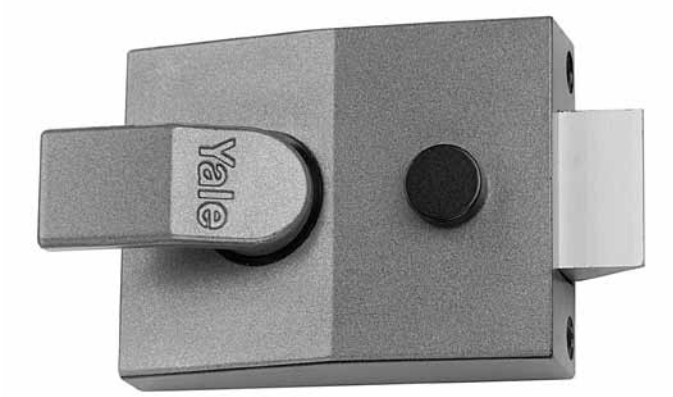

operation

Outside: Furnished standard with 5-pin rim cylinder 1109E.
Inside: Bolt can be deadlocked or held back by slide button, rendering the lock inoperable by key or handle.

Model Numbers	
88	Boxed

dimensions and details

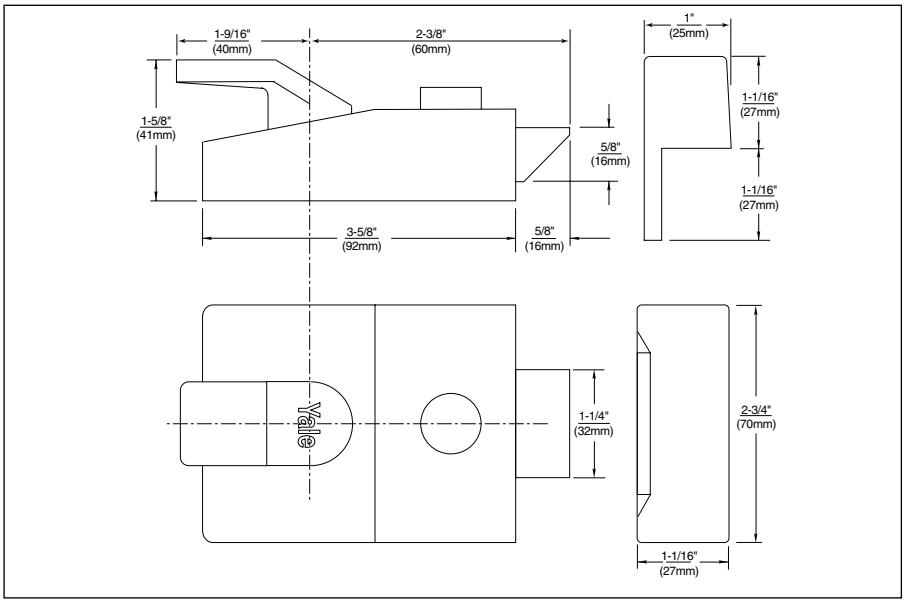

technical information

Description	88
Backset	2-3/8" (60mm)
Material	Zinc Alloy
Springbolt Length	5/8" (16mm)
Reversible Latchbolt	Yes, order #8RB Strike
Cylinder	1109E - Brass 5-pin with anti-pick mushroom drivers
Case Finishes	Dark Metallic Grey only
Cylinder Finish	Brass
2 Keys	RB8
Door Thickness	1-1/4" to 2-1/4" (32mm-57mm)

Dimensions are shown in inches (millimeters).

heavy-duty latchbolt 112

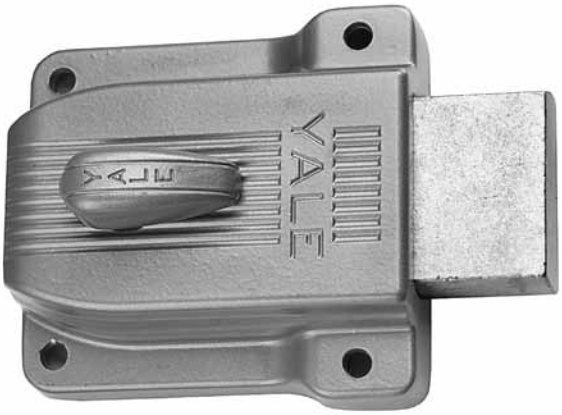

operation

Outside: Furnished standard with 5-pin rim cylinder 1109E.

Inside: 180° turn of the thumbturn throws or retracts deadbolt. Also available with flat strike, model no. 112F (for outswinging doors).

Model Numbers	
112	Boxed
112F	Flat Strike, Boxed

dimensions and details

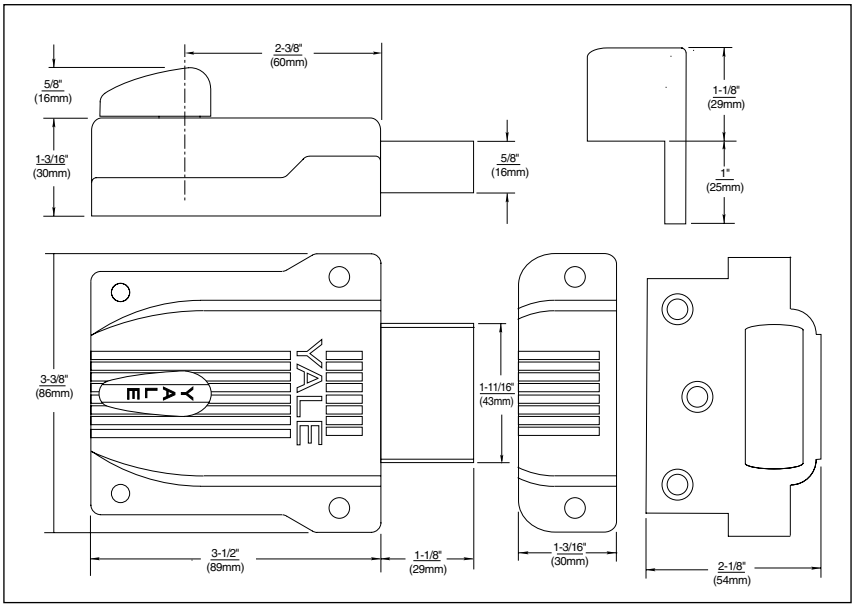

technical information

Description	112
Backset	2-3/8" (60mm)
Material	Zinc Alloy
Springbolt Length	1-1/8" (29mm)
Cylinder	1109E Brass 5-pin with anti-pick mushroom drivers
Case Finishes	Sprayed Brass only
Cylinder Finish	Brass
2 Keys	RB8
Door Thickness	1-1/4" to 2-1/4" (32mm-57mm)

Dimensions are shown in inches (millimeters).

heavy-duty deadbolt 112-1/4

operation

Outside: Furnished standard with 5-pin rim cylinder 1109E.

Inside: Turning the key throws or retracts the deadbolt. Also available with flat strike, model no. 112-1/4F (for outswinging doors).

Model Numbers	
112-1/4	Boxed
112-1/4F	Flat Strike, Boxed

dimensions and details

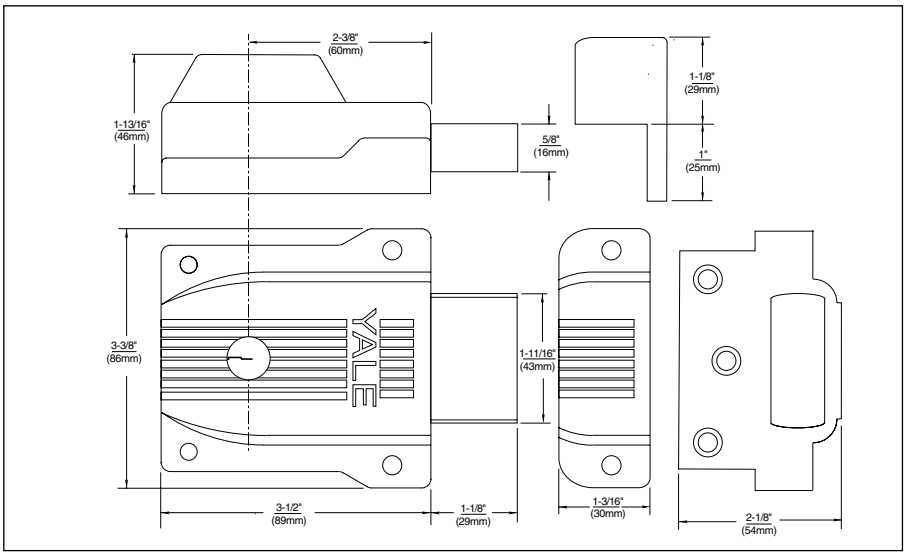

technical information

Description	112-1/4
Backset	2-3/8" (60mm)
Material	Zinc alloy
Deadbolt Length	1-1/8" (29mm)
Cylinder (Outside)	1109E Brass 5-pin with anti-pick mushroom drivers
Cylinder (Inside)	Fixed 3-pin Brass cylinder. No alternatives.
Case Finishes	Sprayed Brass only
Cylinder Finish	Brass
2 Keys	RB8
Door Thickness	1-1/4" to 2-1/4" (32mm-57mm)

Dimensions are shown in inches (millimeters).

jimmy-proof deadlock 197

operation

Outside: Furnished standard with 5-pin rim cylinder 1109E.

Inside: 90° turn of the thumbturn locks or unlocks deadbolt. Also available with flat strike, model no. 197F (for outswinging doors).

Model Numbers	
197	Boxed
V197	Visual Pack
197F	Flat Strike, Boxed

dimensions and details

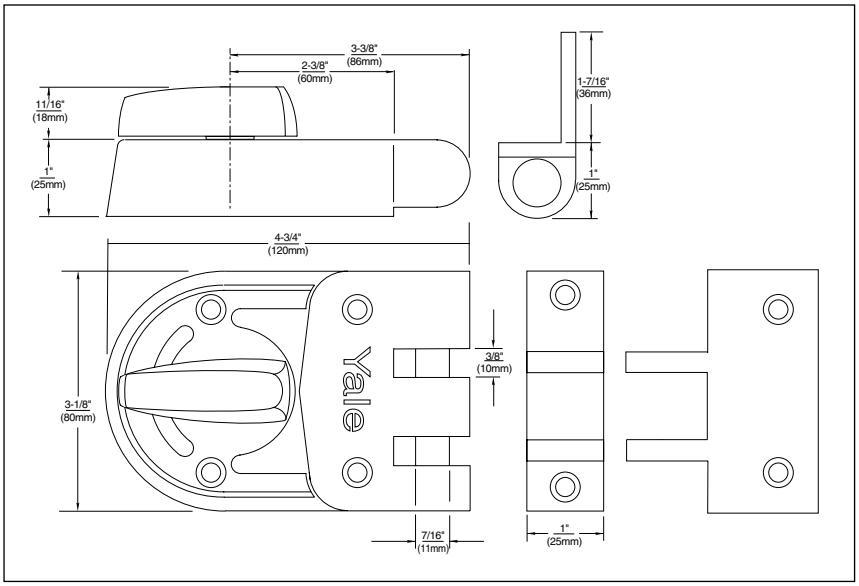

technical information

Description	197
Backset	2-3/8" (60mm)
Material	Zinc Alloy
Deadbolt Length	N/A
Reversible Latchbolt	N/A
Cylinder	1109E - Brass 5-pin with anti-pick mushroom drivers
Case Finishes	Sprayed Brass only
Cylinder Finish	Brass
2 Keys	RB8
Door Thickness	1-1/4" to 2-1/4" (32mm-57mm)

Dimensions are shown in inches (millimeters).

jimmy-proof deadlock 197-1/4

operation

Outside: Furnished standard with 5-pin rim cylinder 1109E.
Inside: Key locks or unlocks deadbolt. Also available with flat strike, model no. 197-1/4F (for outswinging doors).

Model Numbers	
197-1/4	Boxed
V197-1/4	Visual Pack
197-1/4F	Flat Strike, Boxed

dimensions and details

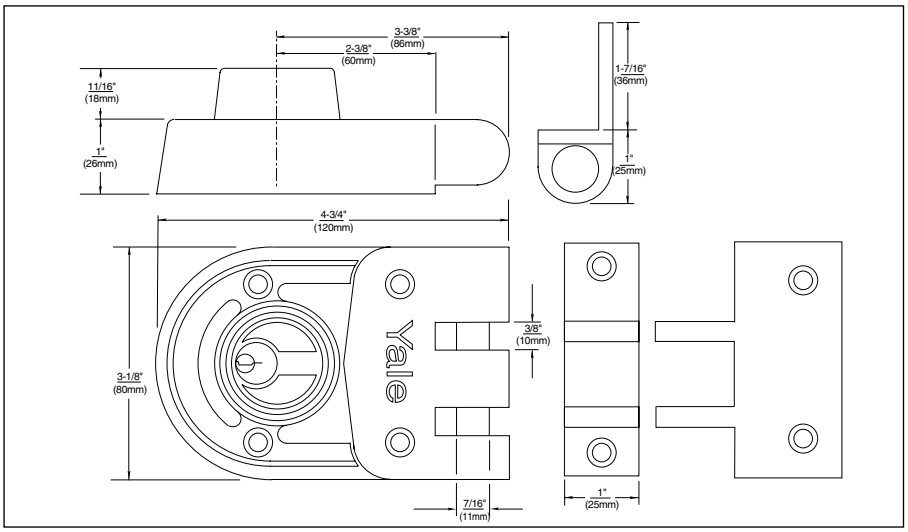

technical information

Description	197-1/4
Backset	2-3/8" (60mm)
Material	Zinc Alloy
Deadbolt Length	N/A
Reversible Latchbolt	N/A
Cylinder (Outside)	1109E Brass 5-pin with anti-pick mushroom drivers
Cylinder (Inside)	Fixed 3-pin Brass cylinder. No alternatives.
Case Finishes	Sprayed Bronze only
Cylinder Finish	Brass
2 Keys	RB8
Door Thickness	1-1/4" to 2-1/4" (32mm-57mm)

Dimensions are shown in inches (millimeters).

auxiliary rim lock components

cylinders

Yale® auxiliary rim locks 80, 88, 112, 112-1/4, 197, and 197-1/4 are shipped standard with an 1109E brass, 5-pin, E1R (PARA) section rim cylinder. The 1109E is not available as a replacement cylinder.
Note: 1109E depths and spacings are not compatible with other cylinders available from Yale Locks & Hardware.

For alternative rim cylinders, refer to Yale® KeyMark® and/or *Yale* Cylinder and Keys catalog sections.

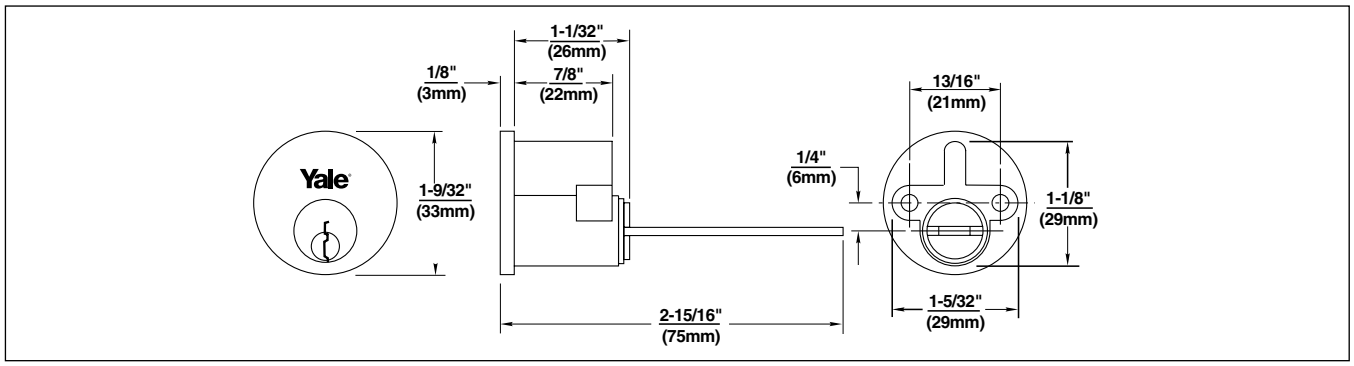

strikes

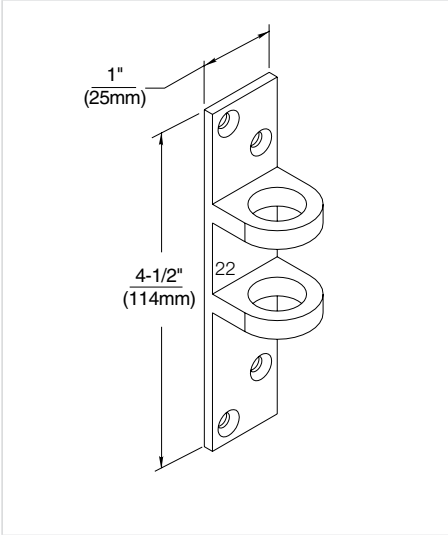

No. 197F Flat Strike

Used with 197F and 197-1/4F for outswing doors.

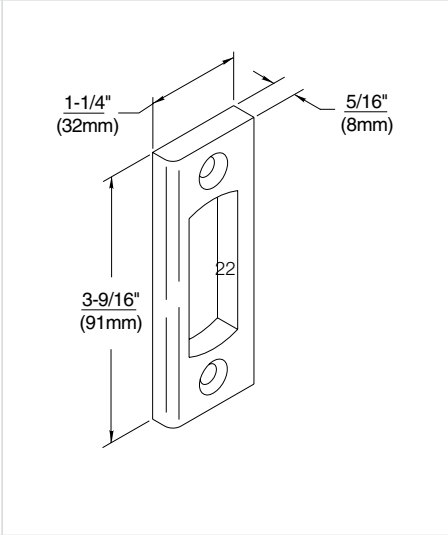

No. 112F Flat Strike

Used with 112F and 112-1/4F for outswing doors.

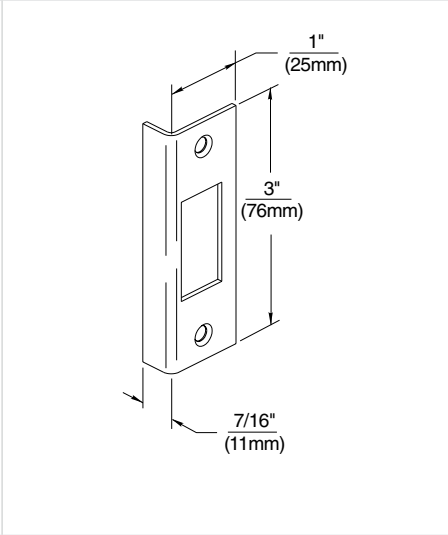

No. 8RB Rim Strike

Used with 80 and 88 for outswing doors.

Dimensions are shown in inches (millimeters).

cabinet locks 511S

511S

Application: Pin tumbler lock for 3/4"(19mm), 1" (25mm), 1-1/8" (29mm) or 1-3/8" (35mm) wood or metal wardrobe doors.
Operation: Key retracts latchbolt.
Material: All brass.

Finishes: Nose and scalp 605 standard; 606, 625 and 626 to order.
Keying: 4-, 5-, or 6-pin tumblers, two keys. Can be Master Keyed and Grand Master Keyed.
Handed: Specify RH or LH. Right hand shown.

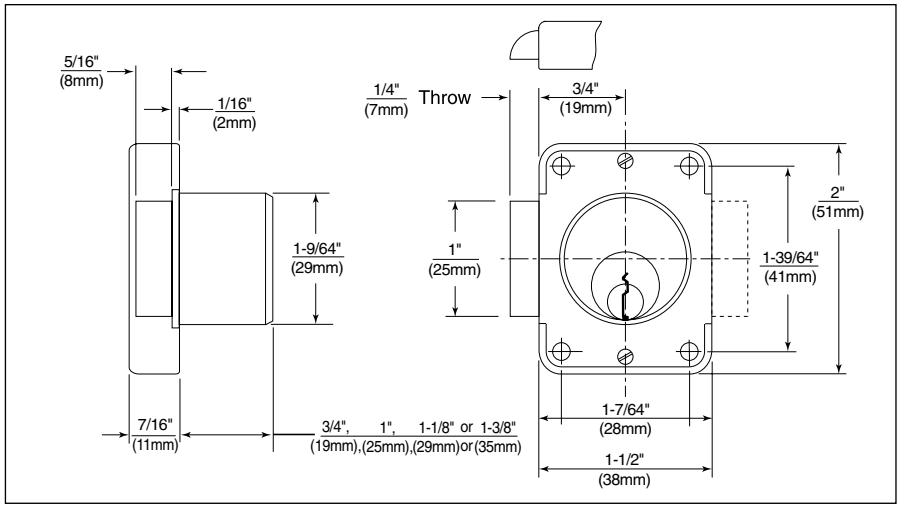

Note: 3/4" available 4-pin only. 1" available 5-pin only.

Dimensions are shown in inches (millimeters).

cabinet locks C970

C970

Operation: Key rotates plug 360°. Key removable in vertical position only. Cam stop pin packed with each cylinder for restricted cam rotation when desired.

Finishes: Available in all finishes as per page 2.
Material: Brass cylinder and cam.
Keys: 5- or 6-pin.

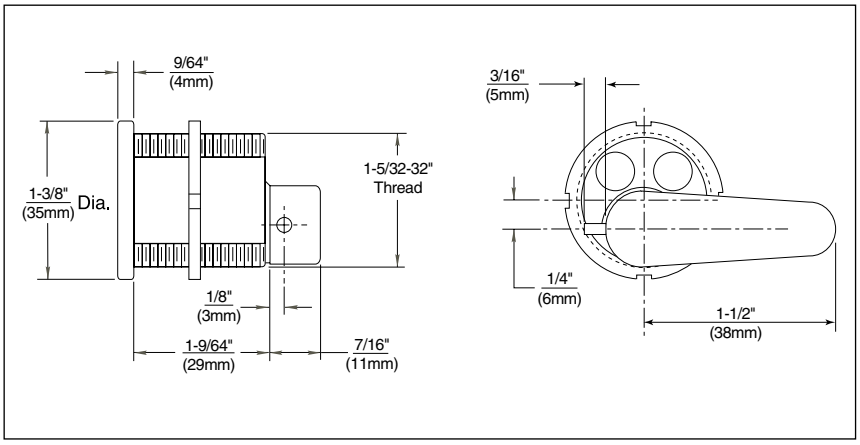

accessories

511S Angle Strike

May be specified with surface type Spring Bolt Lock 511S.

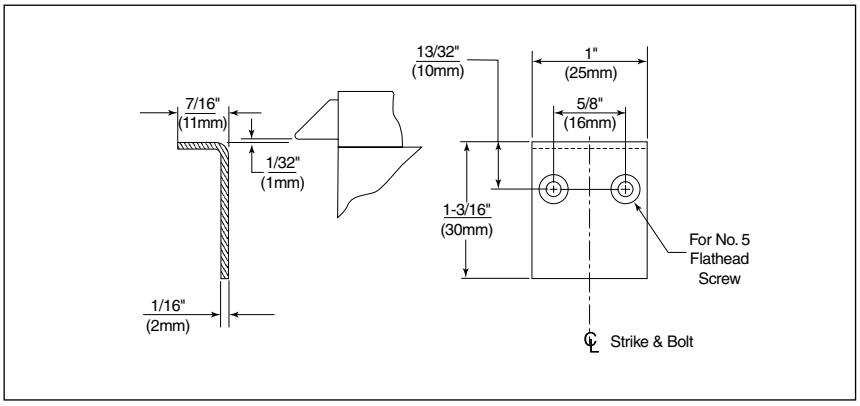

Dimensions are shown in inches (millimeters).

special purpose lock C1810

C1810 **Letter Box Lock**

Finishes: 606 and 626.
Keying: Standard 5- or 6-pin, all cylinders drilled for 6-pin. Can be keyed into 7-pin system, first six pins active, or with special long cylinder with 7 active pins.

Available: KD standard. KA or MK (for special purposes) by order. Cannot be Construction Master Keyed. Two keys.
Cam: Part No. 30-0501-2001-999
Screws: Part No. 81-0021-1102-999

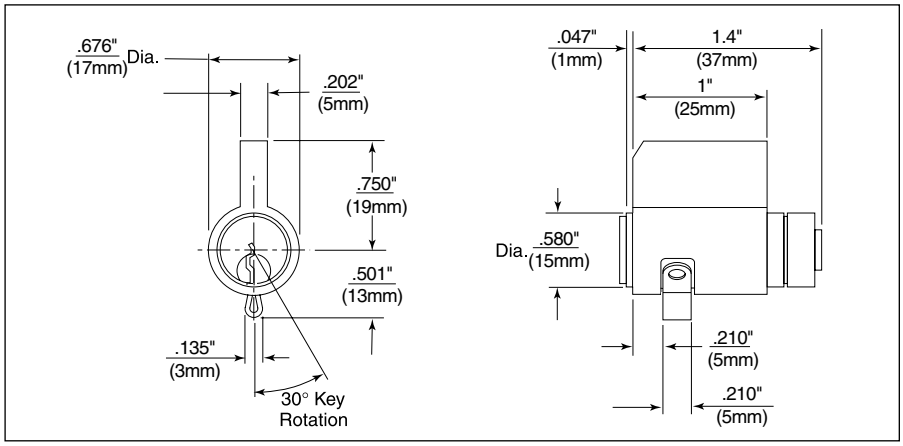

Dimensions are shown in inches (millimeters).

C900 series electrical switch cylinders

Operation: Key rotates plug 360°. Key removable in one, two, or three positions.
Material: Brass and bronze. Brass attaching nuts.
Finishes: 606, 626.
Keying: 5-pin tumblers; two No. 11 keys.

Cylinder Nut:
Part No. 60-7000-2421-000

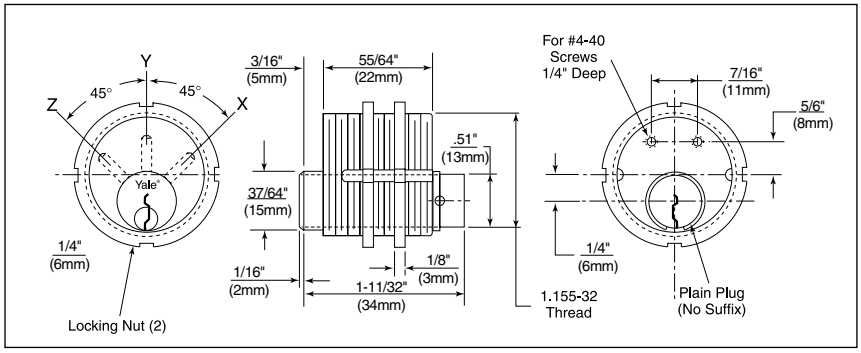

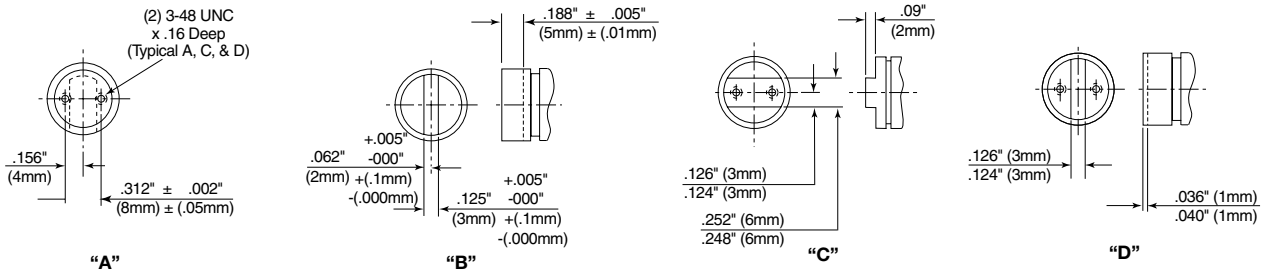

one-position key removable

Model No.	Key Rem. Pos.	Plug Config.	Old Model No.
C910	Y	Plain	C950
C910A	Y	A	C950A
C910B	Y	B	C950B
C910C	Y	C	C954A
C910D	Y	D	C950A
C911	Z	Plain	C951
C911A	Z	A	C951B
C911B	Z	B	C951D
C911C	Z	C	--
C911D	Z	D	--

two-position key removable

Model No.	Key Rem. Pos.	Plug Config.	Old Model No.
C920	X-Y	Plain	C960
C920A	X-Y	A	C960A
C920B	X-Y	B	C960B
C920C	X-Y	C	C952A
C920D	X-Y	D	--
C921	Y-Z	Plain	--
C921A	Y-Z	A	C951A
C921B	Y-Z	B	C951C
C921C	Y-Z	C	C953A
C921D	Y-Z	D	--
C922	X-Z	Plain	C972
C922A	X-Z	A	--
C922B	X-Z	B	--
C922C	X-Z	C	--
C922D	X-Z	D	--

three-position key removable

Model No.	Key Rem. Pos.	Plug Config.	Old Model No.
C930	X-Y-Z	Plain	C971
C930A	X-Y-Z	A	C971A
C930B	X-Y-Z	B	C971B
C930C	X-Y-Z	C	--
C930D	X-Y-Z	D	--

when ordering

Specify keyway and bitting No. (C910 and C911 models can be master keyed). Specify finish. (Standard finishes 606 and 626.) If mounting nuts are not required, specify "w/o nuts.".

Dimensions are shown in inches (millimeters).

ordering information

The following is a hypothetical item listed in proper sequence for complete and simplified ordering. The item you order may or may not require use of all indicated segments. Please refer to the alphabetical listing below to include all necessary information that will allow us to properly fill your order.

Qty.	A	B	C	D	E	F	G	H
100	351	MK	Lock	612	RH	30S	2153	1-3/4"

See Supplementary Specifications Below	
Box	**Translation**
A	Model Number
B	Highest Keying Level
C	Description
D	Finish
E	Hand
F	Strike
G	Cylinder
H	Door Thickness
I	Supplementary Specifications - Specific keying, 7-pin cylinder, spacer plate, special cylinder rings, etc. (Specify by model number where available.)

online literature and templates

For the latest information on Yale Locks & Hardware products, visit our website at: www.yalelocks.com

Click on the “Product Information” button to find:

- Catalogs
- Parts manuals
- Templates
- Specifications
- Installation instructions

Yale® customers can click on the ebusiness symbol on the website to register for an ebusiness account to:

- Check the status of orders
- Check availability of QuickShip items
- Track your order and confirm delivery
- Receive email notification of template changes
  And More...

Or contact us at:

U.S.A.
Yale Locks & Hardware
Address: 225 Episcopal Road, Berlin, CT 06037-4004
Tel: 1-800-438-1951 • Fax: 1-800-338-0965 • www.yalelocks.com

Canada:
ASSA ABLOY Door Security Solutions Canada
Address: 160 Four Valley Drive, Vaughan, Ontario L4K 4T9
Tel: 1-800-461-3007 • Fax: 1-800-461-8989 • www.assaabloy.ca

International:
ASSA ABLOY Americas International
Tel: 1-905-821-7775 • Fax: 1-905-821-1429 • www.assaabloyai.com

Yale Locks & Hardware is a division of Yale Security Inc., an ASSA ABLOY Group company.

Yale® and MicroShield® are registered trademarks of Yale Security, Inc., an ASSA ABLOY Group company. KeyMark® is a registered trademark of Medeco Security Locks, Inc., and ASSA ABLOY Group company. Other products’ brand names may be trademarks or registered trademarks of their respective owners and are mentioned for reference purposes only. These materials are protected under Copyright© 2002, 2013, Yale Security Inc., an ASSA ABLOY Group company. All rights reserved. Reproduction in whole or in part without the express written permission of the Yale Security, Inc., an ASSA ABLOY Group company, is prohibited.

YALE, with its unique global reach and range of products, is the world’s favorite lock.

ASSA ABLOY *is the global leader in door opening solutions, dedicated to satisfying end-user needs for security, safety and convenience.*

42117-9/13RE