SARGENT
ASSA ABLOY

PRODUCT CATALOG

80 Series Exit Device

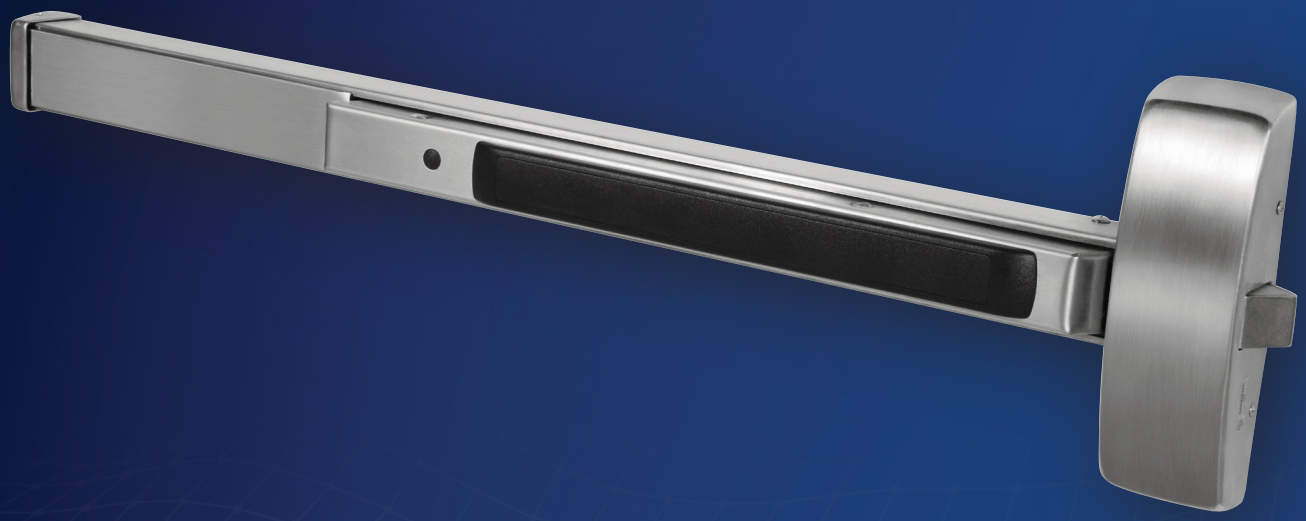

Experience a safer
and more open world

Table of Contents

SARGENT
ASSA ABLOY

Features and Innovations 6

UL Fire Door Ratings and Opening Sizes 6

Windstorm Certifications 7

Rim Exit Device for Wide Stile Doors (Panic & Fire Rated)

8888/8810 Multi-Function Rim Exit Devices & Trims 8-9

8800 Rim Exit Devices 10

8800 Functions & Trims 11

Mortise Lock Exit Device for Wide Stile Doors (Panic & Fire Rated)

8900 Mortise Exit Devices 12

8900 Functions & Trims 13

Surface Vertical Rod Exit Device for Wide Stile Doors (Panic & Fire Rated)

8700 SVR Exit Devices 14

8700 Functions & Trims 15

NB8700 Less Bottom Rod SVR Exit Devices 16

NB8700 Functions & Trims 17

Concealed Vertical Rod Exit Device for Wide Stile Doors (Panic & Fire Rated)

MD8600 (Windstorm Rated) & NB-MD8600 Concealed Vertical Rod Exit Device for Metal Doors 18

MD8600 & NB-MD8600 Functions & Trims 19

AD8600 & NB-AD8600 CVR Devices for Aluminum Doors 20

AD8600 & NB-AD8600 Functions & Trims 21

WD8600 & NB-WD8600 CVR Devices for Wood Doors 22

WD8600 & NB-WD8600 Functions & Trims 23

WARNING

This product can expose you to lead which is known to the state of California to cause cancer and birth defects or other reproductive harm. For more information go to www.P65warnings.ca.gov.

Copyright © 1998-2025, SARGENT Manufacturing Company. All rights reserved. Reproduction in whole or in part without the express written permission of SARGENT Manufacturing Company is prohibited. Patent pending and/or patent www.assaabloydss.com/patents.

Table of Contents

SARGENT
ASSA ABLOY

Narrow Design Rim Exit Device for Wide & Narrow Door Stiles (Panic & Fire Rated)

8500 Rim Exit Devices 24

8500 Functions & Trims 25

AD8500 Narrow Design Rim Exit Device for Aluminum Doors 26

AD8500 Functions & Trims 27

Narrow Design Mortise Lock Exit Device for Wide Door Stiles (Panic & Fire Rated)

8300 Mortise Exit Devices 28

8300 Functions & Trims 29

Narrow Design Concealed Vertical Rod Exit Device for Wide & Narrow Stiles (Panic & Fire Rated)

MD8400 & NB-MD8400 Narrow Stile CVR Devices for Metal Doors 30

MD8400 & NB-MD8400 Functions & Trims 31

AD8400 & NB-AD8400 Narrow Stile CVR Devices for Aluminum Doors 32

AD8400 & NB-AD8400 Functions & Trims for Aluminum Doors 33

Low Profile Center & Top Latching Vertical Rod Exit Device (Panic & Fire Rated)

LP8600 & LR8600 Center & Top Latching Exit Devices for Pairs of Doors 34

LP8600/LR8600 Functions & Trims for Pairs of Doors 35

LS8600 Center and Top Latching Vertical Rod for Single Door Applications 36

LS8600 Functions & Trims for Single Doors 37

Copyright © 1998-2025, SARGENT Manufacturing Company. All rights reserved. Reproduction in whole or in part without the express written permission of SARGENT Manufacturing Company is prohibited. Patent pending and/or patent www.assaabloydss.com/patents.

Table of Contents

SARGENT
ASSA ABLOY

UL Listed Windstorm Products

MD8600 Concealed Vertical Rod Exit Devices: UL Hurricane-Resistant . . . 38-39
HC8800 Rim Exit Devices: UL Listed Hurricane-Resistant . . . 40-41
WS8800 Rim Exit Devices: UL Listed Hurricane-Resistant . . . 42-43
WS8900 Mortise Exit Device: UL Listed Hurricane-Resistant . . . 44-45
HC4-8700 SVR Exit Devices: UL Listed Hurricane-Resistant (up to 150 psf) . . . 46-47
HC8700 SVR Exit Devices: UL Listed Hurricane-Resistant (up to 65 psf) . . . 48-49
FM8700 2-Point SVR Exit Device: UL Listed Tornado-Resistant ICC500 (2014/2020) . . . 50-51

Electrical Options

ElectroLynx® Information & Option Compatibility Chart . . . 52
Security Shim Kit Option . . . 53
SARGuide PL- Option & Latch Bolt Monitoring Option (53-) . . . 54
Alarm (AL-) Option & Request-to-Exit (55-) Option . . . 55
Electric Latch Retraction Option (56-) . . . 56
Electric Latch Retraction Motor Kits & Push Rail Kits . . . 57
Electric Dogging (58-) . . . 58
ElectroGuard Delayed Egress Option (59-) . . . 59
Electrified & Monitored (54-) ET Trims & Power Supplies . . . 60

Lever and Trim Designs

ET Trim, Levers and Pulls . . . 61
Coastal Series Levers & Thumbpiece Pulls . . . 62
Studio Collection Levers . . . 63-64
Ordering Gramercy Series Levers . . . 65
Anti-Vandal Trim, 988 Surface Bolt, ET Plates & Dummy Rails . . . 66

Miscellaneous

Cylinder Information . . . 67
Mullions: Aluminum, Steel & Electrified . . . 68-69
Mullion Accessories and Stabilizers . . . 70
Through-bolt Kits, Rod Extensions and Shim Kits . . . 71
End Caps and Cylinder Dogging Kits . . . 72
Rail Sizes and How to Order ET Trim . . . 73
Mechanical Options & Descriptions . . . 74
Cylinder Options & Descriptions . . . 75
How to Order . . . 76
Finishes & Finish Care . . . 77
Architectural Specifications . . . 78

Copyright © 1998-2025, SARGENT Manufacturing Company. All rights reserved. Reproduction in whole or in part without the express written permission of SARGENT Manufacturing Company is prohibited. Patent pending and/or patent www.assaabloydss.com/patents.

Features and Innovations

SARGENT manufactures a full line of exit devices including vertical rod, rim and mortise for both standard and narrow stile doors. These devices provide the best combination of simplicity, strength, durability, aesthetics and innovation and are perfect for applications such as commercial office buildings, medical and educational institutions.

SIMPLICITY

- Easy installation and maintenance-free design
- "True" architectural hardware finishes consistent with BHMA/ANSI standards
- Few moving parts – less wear
- Modular construction

STRENGTH & DURABILITY

- Made of finest component materials
- Heavy duty mounting construction
- Built to withstand abusive conditions
- 5 Year warranty

HURRICANE-RESISTANT PRODUCTS AND CERTIFICATIONS

- UL Certified Latching Hardware and Assemblies (ZHEM & ZHLL)
- Product-specific detailed certifications and listings
- Available with Rim, Mortise, SVR & CVR devices

SECURITY

- Double cylinder functions available
- Torx® and spanner screws
- Anti-vandal trim options
- Master keying with SARGENT Security Key systems available (Signature, Keso F1, Keso and XC)

INNOVATION

- Broad offering of electro-mechanical solutions for the most demanding access/egress control applications
- **MicroShield®** anti-microbial finish coating offers a new level of protection
- **SARGuide™** exit device contains an electroluminescent touchpad to enhance the visibility of exit locations in dark or smoke-filled passages and effectively improve the safety of any public building
- CTL (Center and Top Latching) Vertical Rod Devices offer less bottom rod convenience with true center latching for added security

ECOFLEX®

- Reduces energy consumption up to 95% for exit trim, as certified by Green Circle, which lowers operating costs; assists with load reduction in optimizing energy performance credit in LEED, and reduces the number of power supplies requires.
- Field configurable to fail-safe or fail-secure, and operates from 12-24VDC, offering greater flexibility in system design.
- Innovative actuator design provides superior reliability through higher performance and reduced maintenance; the ability to have longer cable runs without negatively impacting lock function. It reduces the risk of voltage drops and eliminates inductive kickback, and lowers the total cost of owner ship.

MICROSHIELD® COATING

MicroShield®
ASSA ABLOY Group companies offer MicroShield®, an anti-microbial coating for door hardware. MicroShield uses proven silver ion-based technology from Agion®, a leading provider of antimicrobial solutions, to stem the spread of bacteria and other microbes.

MicroShield® is a trademark of the respective ASSA ABLOY Group company.

The Agion antimicrobial is not intended as a substitute for good hygiene. Coated products must still be cleaned to ensure the surfaces will be free of destructive microbes. ASSA ABLOY makes no representations or warranties, express or implied, as to the efficacy of the Agion antimicrobial. A copy of the Agion warranty is available upon request. Agion is a registered trademark of Agion Technologies, Inc., Wakefield, MA, USA.

SARGUIDE

The PL- SARGuide Photoluminescent Exit Device is a non electrical option which produces visible EXIT signage in darkness or low lit areas.

- Approved for use in New York City in accordance with RS 6-1 and RS 6-1A.
- Recharges from ambient light.
- No wiring or maintenance needed.

Copyright © 1998-2025, SARGENT Manufacturing Company. All rights reserved. Reproduction in whole or in part without the express written permission of SARGENT Manufacturing Company is prohibited. Patent pending and/or patent www.assaabloydss.com/patents.

UL Fire Door Ratings and Openings Sizes

SARGENT
ASSA ABLOY

MAXIMUM DOOR OPENING-FIRE DOORS

Type	Exit Device	Door Material	Single Door	with 12-HC980 or 12-980 or 12-HCL980 Mullion	with 12-L980	with 12-HD980 Mullion	VR/VR Doors Swing Same Direction	SVR/ Mortise Doors Swing Same Direction	CVR/ Mortise MD Doors Swing Same Direction	CVR/ Mortise WD Doors Swing Same Direction	VR/VR Double Egress
Rim	12-8800	Metal	3 Hour 4′ x 10′	3 Hour 8′ x 8′	1.5 Hour 8′ x 8′	3 Hour 8′ x 10′	—	—	—	—	—
	12-8500	Metal	3 Hour 4′ x 8′	3 Hour 8′ x 8′	1.5 Hour 8′ x 8′	3 Hour 8′ x 8′	—	—	—	—	—
Mortise Lock	12-8900	Metal	3 Hour 4′ x 10′	—	—	—	—	3 Hour 8′ x 8′	3 Hour 8′ x 10′	—	—
	12-8300	Metal	3 Hour 4′ x 10′	—	—	—	—	—	3 Hour 8′ x 10′	—	—
SVR	12-FM8700	Metal	3 Hour 4′ x 8′	—	—	—	3 Hour 8′ x 8′	—	—	—	—
	12-8700	Metal	—	—	—	—	3 Hour 8′ x 8′	3 Hour 8′ x 8′	—	—	3 Hour 8′ x 8′
	12-NB8700	Metal	—	—	—	—	3 Hour 8′ x 10′	—	—	—	3 Hour 8′ x 10′
CVR	12-MD8600	Metal	—	—	—	—	3 Hour 8′ x 10′	—	3 Hour 8′ x 10′	—	3 Hour 8′ x 10′
	12-NB-MD8600	Metal	—	—	—	—	3 Hour 8′ x 10′	—	—	—	3 Hour 8′ x 10′
	12-MD8400	Metal	—	—	—	—	3 Hour 8′ x 10′	—	3 Hour 8′ x 10′	—	3 Hour 8′ x 10′
	12-NB-MD8400	Metal	—	—	—	—	3 Hour 8′ x 10′	—	—	—	3 Hour 8′ x 10′
CVR/Mortise	12-LS8600	Metal	3 Hour 4′ x 10′	—	—	—	—	—	—	—	—
	12-LP8600 & 12-LR8600	Metal	—	—	—	—	3 Hour 8′ x 10′	—	—	—	3 Hour 8′ x 10′

Any retrofit or other field modification to a fire rated opening can potentially impact the fire rating of the opening, and Sargent Manufacturing Company makes no representations or warranties concerning what such impact may be in any specific situation. When retrofitting any portion of an existing fire rated opening, or specifying and installing a new fire-rated opening, please consult with a code specialist or local code official (Authority Having Jurisdiction) to ensure compliance with all applicable codes and ratings.

Notes:

- Please contact door manufacturer for specifications regarding fire door construction.
- Consult wood door manufacturers for current UL listing.

Copyright © 1998-2025, SARGENT Manufacturing Company. All rights reserved. Reproduction in whole or in part without the express written permission of SARGENT Manufacturing Company is prohibited. Patent pending and/or patent www.assaabloydss.com/patents.

Windstorm Certifications

SARGENT
ASSA ABLOY

WINDSTORM CERTIFICATIONS: FLORIDA BUILDING CODES & UL LISTINGS

SARGENT Manufacturing's products meet building codes that require hurricane, windstorm and FEMA certifications, including some of the most stringent building codes as specified in the Florida Building Code, Miami Dade Code and the International Building Code. Listed below are certifications and standards met by the 80 Series lock.

FLORIDA BUILDING CODE: FL2998
UL CERTIFICATION DIRECTORY: ZHEM.R21744 – LATCHING HARDWARE

ANSI/SDI-BHMA A250.13	"Testing and Rating of Severe Windstorm Resistant Components for Swinging Door Assemblies"
ANSI/ASTM E330	"Standard Test Method for Structural Performance of Exterior Windows, Doors, Skylights and Curtain Walls by Uniform Static Air Pressure Difference"
ANSI/ASTM E1886	"Standard Test Method for Performance of Exterior Windows, Curtain Walls, Doors, and Impact Protective Systems Impacted by Missile(s) and Exposed to Cyclic Pressure Differentials"
ASTM E1996	"Standard Specification for Performance of Exterior Windows, Curtain Walls, Doors and Impact Protective Systems Impacted by Windborne Debris in Hurricanes"
(TAS) 201	"Impact Test Procedures"*
(TAS) 202	"Standard Test Method for Structural Performance of Exterior Windows, Doors, Skylights and Curtain Walls by Uniform Static Air Pressure Difference"
(TAS) 203	"Criteria for Testing Products Subject to Cyclic Wind Pressure Loading"*

* Published in the "Florida Building Code"

Any retrofit or other field modification to a fire rated opening can potentially impact the fire rating of the opening, and Sargent Manufacturing Company makes no representations or warranties concerning what such impact may be in any specific situation. When retrofitting any portion of an existing fire rated opening, or specifying and installing a new fire-rated opening, please consult with a code specialist or local code official (Authority Having Jurisdiction) to ensure compliance with all applicable codes and ratings.

UL CERTIFICATION DIRECTORY: ZHLL.R21744 – PRODUCTS FOR USE IN WINDSTORM-RATED ASSEMBLIES

Certifications to meet assembly requirements are done in conjunction with doors from ASSA ABLOY Group companies CECO DOOR and CURRIES.

ASTM E330	"Standard Test Method for Structural Performance of Exterior Windows, Doors, Skylights and Curtain Walls by Uniform Static Air Pressure Difference"
ANSI/ASTM E1886	"Standard Test Method for Performance of Exterior Windows, Curtain Walls, Doors, and Impact Protective Systems Impacted by Missile(s) and Exposed to Cyclic Pressure Differentials"
ASTM E1996	"Standard Specification for Performance of Exterior Windows, Curtain Walls, Doors and Impact Protective Systems Impacted by Windborne Debris in Hurricanes"
AAMA/WDMA/CSA 101/I.S.2/A440	"Standard/Specification for Windows, Doors, and Unit Skylights"
FEMA Publication 320 (2021)	"Taking Shelter From the Storm: Building a Safe Room for Your Home or Small Business", investigated with respect to impact and pressure requirements only.
FEMA Publication 361 (2021)	"Design and Construction Guidance for Community Safe Rooms", investigated with respect to impact and pressure requirements only.
ICC 500 (2014/2020)	"ICC/NSSA Standard for the Design and Construction of Storm Shelters", investigated with respect to impact and pressure testing. Minimum missile impact speeds vary with the design wind speed desired for a particular product. The information below correlates design wind speed to the minimum missile speeds as discussed in Table 305.1.1 of ICC 500

Any retrofit or other field modification to a fire rated opening can potentially impact the fire rating of the opening, and Sargent Manufacturing Company makes no representations or warranties concerning what such impact may be in any specific situation. When retrofitting any portion of an existing fire rated opening, or specifying and installing a new fire-rated opening, please consult with a code specialist or local code official (Authority Having Jurisdiction) to ensure compliance with all applicable codes and ratings.

Copyright © 1998-2025, SARGENT Manufacturing Company. All rights reserved. Reproduction in whole or in part without the express written permission of SARGENT Manufacturing Company is prohibited. Patent pending and/or patent www.assaabloydss.com/patents.

SARGENT
ASSA ABLOY

8888/8810 Multi-Function Rim Exit Device and Trims

8888/8810 MULTI-FUNCTION EXIT DEVICE AND TRIM

- Device & trim sold separately; easy to mix and match
- Designed for standard width stile applications on wood and metal doors
- 7 functions available as determined by the trim function
- 3 trim designs available:
  - 700 ET Controls
  - 88 Lever & Rose trim
  - Pull trims
- Single and double door applications with a mullion

The 8888/8810 Rim Exit Device

- ANSI/BHMA A156.3 - Grade 1
- UL10C (Fire) and UL305 (Panic) Listed
- Device is non-handed
- ANSI/BHMA architectural finishes
- Four standard sizes available

To Order: Specify options, 8888 or 8810, Rail Size and Finish
Example: 12-19-8888F x 32D

700 Series ET Control

The 700 Series ET Control is sold separately from the exit device and can be used with 8888 & 8810 Exit Device. The trim is non handed and is through-bolted to the chassis for greater security and durability. Available in 7 functions and SARGENT Studio, Coastal and standard lever designs to accommodate most requirements.

- ANSI/BHMA Finishes
- Easy operating lever handle allows convenient one hand operation
- ET trim is not available in 32 or 32D
- Stainless steel levers are available

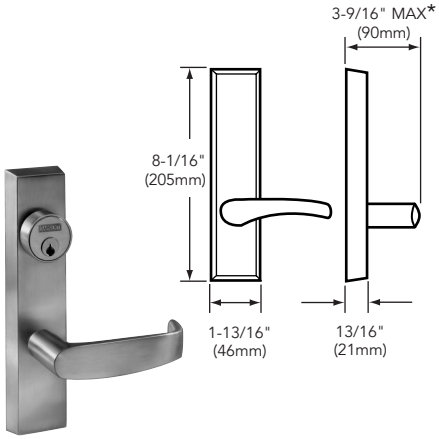

Specifications

Door Type	Wood or metal Doors
Door Thickness	1-3/4" (44mm) minimum thickness. For doors over 1-3/4" to 2-1/4" thick, specify thickness and order as 31-
Stile	4-1/2" (114mm) minimum stile width
Mounting	Supplied standard with wood and machine screws Available with through-bolts and mortise nuts
Chassis Cover	Cold drawn stainless steel, brass or bronze with ANSI/BHMA Finishes
Chassis	Nonferrous alloy (Panic) Ferrous alloy (Fire Rated)
Rails	Roll Formed Stainless Steel, Brass or Bronze with ANSI/BHMA Finishes
Hand	Non-handed
Dogging Feature (Non 12- only)	Hex key dogging standard on non fired rated devices; specify 16- for cylinder dogging (#41 cylinder supplied)
Latchbolt	Stainless steel, 3/4" (19mm) throw
Strike	649 Strike supplied standard for panic & fire rated openings
Fire Exit Hardware	See chart - Page 6

Rail Chart

- Rails are available in 4 sizes, use door width to determine size needed.
- Rails will be factory cut to size if door width is supplied or can be cut in the field

Stock Size	Door Widths	Remarks
E	24" to 32" (61cm to 81cm)	No cutting required for 32" (81cm) door
F	33" to 36" (84cm to 91cm)	No cutting required for 36" (91cm) door
J	37" to 42" (94cm to 107cm)	No cutting required for 42" (107cm) door
G	43' to 48" (110cm to 122cm)	No cutting required for 48" (122cm) door

88 Lever and Rose Trim

- The 88 Lever and Rose Trim is sold separately from the exit device and can be used with 8888 & 8810 Exit Device.
- The trim is non handed and is through-bolted to the chassis for greater security and durability. Available in 4 functions and 4 lever designs to accommodate most requirements.

LB
ROSE: L
LEVER: B

688 Trim Retrofit Kit

- 688 Trim Retrofit kit allows an 8810/8888 rim exit with an ET to replace Von Duprin's 98/99 series exit with trim with minimal door prep.
- Order as: 688 Kit

649 Strike

- Supplied standard for panic & fire rated openings
- Surface applied
- Black nylon coated

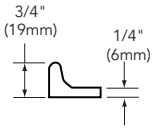

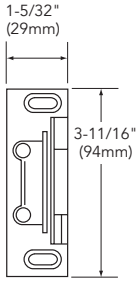

Copyright © 1998-2025, SARGENT Manufacturing Company. All rights reserved. Reproduction in whole or in part without the express written permission of SARGENT Manufacturing Company is prohibited. Patent pending and/or patent www.assaabloydss.com/patents.

8888/8810 Multi-Function Rim Exit Device and Trims

SARGENT
ASSA ABLOY

How to order 8888/8810 Multi-Function Exit Devices:
Specify the following:

Options	Series	Rail	Finish
16-	8888 or 8810	F	32D

- All trims and functions listed on this page, work with 8888 & 8810 Exit Devices
- Available options listed at the right
- 8888 & 8810 are identical products and are non-handed
- Exit devices are not available in 14, 15, 26 and 26D finishes

How to order trim for 8888 & 8810 Exit Devices:
Specify the following:

Options	Trim Designation	Hand	Finish
10-	713-8 ET_*	RHR	26D
10-	88-CL_ *	Non-Handed	10B
60-	814-MSL	RHR	04

*Specify lever design
Available Options listed at the right

Options

Exit	Trim
12- *16- 19- 43- 5CH- GL- CPC- LC- LD- PL-	10- 11- 11-70- 11-72-7P- 11-73-7P- 21- 60- 63- 64- +70- +72- +73- +73-7P- +65-73- +65-73-7P- BR- LC- SC- SE- ++ SF- *** SG-

* Supplied with standard 41 cylinder, for cylinder options, see trim options

** Only available with 15, 26D and 32D finishes

\+ Single crossed options are not available with 88 Lever & Rose Trim with J Lever

++ Double Cross options are only available with 88 Lever & Rose Trim

700 Series ET Trim

SARGENT Function Numbers	ANSI Function Numbers	Description & Cylinder Info (1-3/4" Door)	Trim Designations
04	03	Night Latch, Key Retracts Latch, #34 Cylinder Supplied	704 ET_ x Hand & Finish
10	02	No outside operation (No Cylinder), ET Control is used as Pull Only	710 ET_ x Hand & Finish
13	08	Key Outside Unlocks/Locks Trim, #41 Cylinder Supplied	713-8 ET_ x Hand & Finish
15	14	Passage Only (No cylinder)	715-8 ET_ x Hand & Finish
40	02	Freewheeling Trim - No outside operation, (No Cylinder) Dummy Trim	740 ET_ x Hand & Finish
43	08	Freewheeling Trim - Key Outside Unlocks/ Locks Trim, #41 Cylinder Supplied	743-8 ET_ x Hand & Finish
44	03	Freewheeling Trim - Key Retracts Latch, #34 Cylinder Supplied	744 ET_ x Hand & Finish

Note: ET trim is not available in 32 (629) or 32D (630)

700 Series ET Controls
To order: Specify options followed by trim designation, lever design, hand and finish (as shown to the right).
Example: 11-SG-713-8 x RHR x 10B

Freewheeling Trim
The lever rotates when the door is locked preventing excessive force from being applied to the horizontal lever

88 Lever and Rose Trim
To order: Specify options followed by trim designation, lever design and finish (as shown to the right).
Example: 10-SG-88-CLP x 26D

ANSI Function Numbers	Description	Trim Designations
03	Key Retracts Latch, Cylinder Supplied	88-KL_ x Finish
02	No outside Operation (No Cylinder), Dummy Trim	88-DL_ x Finish
08	Key Outside Unlocks/locks Trim, Cylinder Supplied	88-CL_ x Finish
14	Passage Only (No cylinder)	88-LL_ x Finish

Lever Designs available for 88 Lever & Rose Trim are L, B, J & P
Note: For 88 Lever & Rose trim, the 1st letter is the function, the 2nd is the "L" Rose Design & the 3rd is the lever design specified

Available Finishes

Sargent Finishes	BHMA Finishes
03	605
04	606
09	611
10	612
10B	613
10BE	613E
10BL	613L
14	618
15	619
20D	624
26	625
26D	626
32	629
32D	630
BSP	—
WSP	

Keyed & Non Keyed Pull Trim for 8888 & 8810 Devices
Use the six digit designation (Ex "866-MAL") when ordering trim without an Exit Device, always specify options, designation, finish & hand
Example: 10-SG-814-FSW x 04 x RHR

SARGENT Function #'s	ANSI	Description & Cylinder Info. (1-3/4" Door)	Trim Designations				
04	03	Key Retracts Latch, #34 Cylinder Supplied	814-FSL*	814-FSW*	814-MSL*	814-PSB*	814-STS
10	02	No O/S Operation or Cylinder (Pull Only)	810-FLL	810-FLW	810-MAL	810-PTB	810-STS

Note: 88 Lever & Rose trim & ET's are not available in 32(629) or 32D(630)
* FSL, FSW, MSL and PSB trims are used with (HC-& 12-) 8888 and 8804 only and are the same as FLL, FLW, MAL and PTB pulls, except for cylinder hole located 3/8" (9mm) lower
Note: Pulls and thumb piece trims are not available in 14, 15, 26 or 26D

Copyright © 1998-2025, SARGENT Manufacturing Company. All rights reserved. Reproduction in whole or in part without the express written permission of SARGENT Manufacturing Company is prohibited. Patent pending and/or patent www.assaabloydss.com/patents.

8800 Rim Exit Device

SARGENT
ASSA ABLOY

8800 SERIES RIM EXIT DEVICE

8800 Features
- Designed for standard width stile applications on wood and metal doors
- Also available as an HC8800 or WS8800 for hurricane-resistant applications, see Hurricane-Resistant section of this catalog
- Single point rim latching device
- Single door & double door applications with mullions
- Quiet operation and solid security
- ANSI/BHMA A156.3 - Grade 1
- UL10C (Fire) and UL305 (Panic) Listed

Specifications	8800 Series Rim Exit Device
Door Type	Metal Doors
Door Thickness	1-3/4" (44mm) minimum thickness. For doors over 1-3/4" to 5" thick, specify thickness and order as 31- (see page 67 for function limitation)
Stile	4-1/2" (114mm) minimum stile width
Rail sizes as determined by door width	Rails are available in 4 sizes, use door width to determine size needed. Rails will be factory cut to size, if door width is supplied. • E Rail for 24" to 32" door widths, No cutting required for 32" door • F Rail for 33" to 36" door widths, No cutting required for 36" door • J Rail for 37" to 42" door widths, No cutting required for 42" door • G Rail for 43" to 48" door widths, No cutting required for 48" door
Strike	649 Standard Black Nylon Coated
Optional Strikes	642, 644 and 613
Dogging Feature	Hex key dogging standard on non fired rated devices; specify 16- for cylinder dogging (#41 cylinder supplied)
Electric Options	AL- Alarm 53- LX Latchbolt Monitor 54- Outside Lever Monitoring 55- Request-to-Exit Signal - Rail Monitoring 56- Remote Latch Retraction 58- Electric Dogging 59- Electroguard – Self Contained Delayed Egress
Weather Resistant	WH- Weep Holes (Available only with Clear Coated Finishes. See Chart - Page 77)
Mounting Fasteners	Supplied standard with wood and machine screws Available with through-bolts and mortise (sex) nuts
Latch Bolt	Stainless steel, 3/4" (19mm) throw
Device Centerline from Finished Floor	41" (1041 mm) for Standard Applications
Center Case Dimensions	8-3/8" (213mm) x 2-5/8" (67mm)
Projection	Pushbar Neutral – 3" (76 mm) Pushbar Depressed – 2-1/8" (54 mm)
Fire Exit Hardware	See Chart – Page 6

49- Lock/Unlock Indicator Option
- Displays whether the door has been secured by the inside cylinder.
- Red icon indicates locked
- White icon indicates unlocked
- Dogging overrides 49- functionality (must order less dogging)
- Available on 8816 and 8866 functions only

649 Strike
- Supplied standard for panic & fire rated openings
- Surface applied
- Black nylon coated

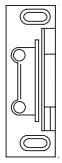

688 TRIM RETROFIT KIT

- 688 Trim Retrofit kit allows an 8800* Series rim exit with an ET to replace Von Duprin's 98/99 Series exit with trim with minimal door prep.

* Except for 16 function

- Order as: 688 Kit

ALTERNATE STRIKES FOR 8800 RIM DEVICES

642 Strike
- Mortised. Dimension "L" equals door thickness plus 1/2" (13mm). Black nylon coated on lip only

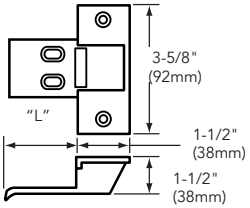

644 Strike
- Surface applied. For use on pairs of doors without mullion. Ductile Iron. Black nylon coated

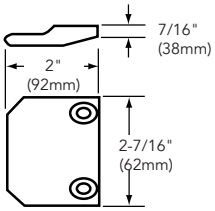

613 Strike
- Half mortised. Black nylon coated

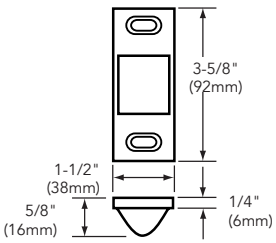

Copyright © 1998-2025, SARGENT Manufacturing Company. All rights reserved. Reproduction in whole or in part without the express written permission of SARGENT Manufacturing Company is prohibited. Patent pending and/or patent www.assaabloydss.com/patents.

8800 Functions and Trims

SARGENT
ASSA ABLOY

How to order:

Options	Series	Function	Rail Lgth	Trim	Hand	Outside Finish	Inside Finish	Door Width
F1-83-56	88	13	F	ETL	RHR	26D	32D	36"

700 Series ET Trim
Exits with ET Trim, specify lever design after the ET designation (e.g., ETL)

Lever Designs for ET Controls
A, B, E, F, J, L, P, W
Also available with Coastal Series & Studio Collection Levers

ET Designation with Suffix (Used to order ET without device)
8800 Series: 704, 706-8, 710, 713-8, 715-8, 716, 740, 743-8, 744, 746-8, 773-8, 774-8, 775-8 & 776-8

Freewheeling Trim
The lever rotates when the door is locked preventing excessive force from being applied to the horizontal lever

Electrified ET Trim
Voltage must be specified for the following functions: 73, 74, 75 and 76. Specify: 12VDC or 24VDC

SARGENT Function Numbers	ANSI Function Numbers	Description & Cylinder Info (1-3/4" Door)	ANSI Type 1 8800 Panic & Fire
04	03	Night Latch, Key Retracts Latch #34 Cylinder Supplied	8804 x ET_
06	09	Key unlocks Trim, Trim retracts latch/ Trim relocks when key is removed #41 Cylinder Supplied	8806 x ET_
10	01	No outside operation (No Cylinder)	8810
10	02	No outside operation (No Cylinder) ET Control is used as Pull Only	8810 x ET_
13	08	Key Outside Unlocks/locks Trim #41 Cylinder Supplied	8813 x ET_
15	14	Passage Only (No cylinder)	8815 x ET_
16	10	Key Outside Retracts Latch; Key Inside Unlocks/Locks O/S Trim O/S #34 Cylinder & I/S #44 Cylinder Supplied	8816 x ET_
40	02	Freewheeling Trim - No outside operation (No Cylinder) Dummy Trim	8840 x ET_
43	08	Freewheeling Trim - Key Outside Unlocks/locks Trim #41 Cylinder Supplied	8843 x ET_
44	03	Freewheeling Trim - Key Retracts Latch #34 Cylinder Supplied	8844 x ET_
46	09	Freewheeling Trim - Key unlocks Trim, Trim retracts latch/ Trim relocks when key is removed #41 Cylinder Supplied	8846 x ET_
73		Electrified ET Trim - Fail Safe Power Off, Unlocks Lever (No Cylinder)	8873 x ET_
74		Electrified ET Trim - Fail Secure Power Off, Locks Lever (No Cylinder)	8874 x ET_
75		Electrified ET Trim - Fail Safe Power Off, Unlocks Lever, Key Retracts Latch #34 Cylinder Supplied	8875 x ET_
76		Electrified ET Trim - Fail Secure Power Off, Locks Lever, Key Retracts Latch #34 Cylinder Supplied	8876 x ET_

Note: Exit devices are available in all standard finishes, except 14, 15, 26 & 26D. With these finishes, exit devices are supplied in 32 or 32D to match accordingly. 32 or 32D is automatically supplied when 26 or 26D is specified. For nickel finishes, specify 14/32 or 15/32D to receive nickel finished trims and stainless exit devices

Pull & Thumbpiece Trim Section			Trim Designations • Use three letter designations (Ex "PTB") when ordering the Exit Device with trim • Use the six digit designation (Ex "866-MAL") when ordering trim without an Exit Device, always specify finish						Series
SARGENT Function Numbers	ANSI Function Numbers	Description & Cylinder Info (1-3/4" Door)							8800 Panic & Fire
04	03	Night Latch, Key Retracts Latch, #34 Cylinder Supplied	814-FSL*	814-FSW*	814-MSL*	814-PSB*	814-STS	862 Pull	8804 x Trim Designation
10	02	No O/S Operation or Cylinder (Pull Only)	810-FLL	810-FLW	810-MAL	810-PTB	810-STS	862 Pull	8810 x Trim Designation
28	15	Passage Only (No cylinder)	828-FLL	828-FLW	828-MAL	828-PTB	828-STS	N/A	8828 x Trim Designation
63	05	Key Outside Unlocks/Locks Thumbpiece #34 Cylinder Supplied	866-FLL	866-FLW	866-MAL	866-PTB	866-STS	N/A	8863 x Trim Designation
66	07	Key Outside Retracts Latch; Key Inside Unlocks/Locks O/S Trim O/S #34 & I/S #44	866-FLL	866-FLW	866-MAL	866-PTB	866-STS	N/A	8866 x Trim Designation

* FSL, FSW, MSL and PSB trims are used with (HC-& 12-) 8888 and 8804 only and are the same as FLL, FLW, MAL and PTB pulls except for cylinder hole located 3/8" (9mm) lower.
Note: Thumbpiece trims for 63 and 66 function devices are identical and are identified as 66 function when trim is ordered separately.
Note: FLW & FSW trims are not available in 32(629) or 32D(630).
Note: Pulls and thumb piece trims are not available in 14, 15, 26 or 26D.

Options

8800
Mechanical Options:
12-
16-
19-
31-
36-
37-
43-
53-
54-
55-
56-
56-HK-
58-
59-
5CH-
BC-59-
76-
85-
86-
87-
AL-
BT-
CPC-
GL-
LD-
PL-
** SG-
TB-
TL-
WH-
Cylinder Options:
10-
10-21-
10-63-
11-
11-21-
11-60-
11-63-
11-64-
11-70-7P-
11-72-7P-
11-73-7P-
11-65-73-7P-
21-
51-
52-
60-
63-
64-
70-
72-
73-
65-73-
65-73-7P-
73-7P-
81-
82-
F1-82-
83-
F1-83-
84-
BR-
LC-
*SC-
*SE-

* Options are not available with 8816
** Only available with 15, 26D and 32D finishes

Available Finishes

Sargent Finishes	BHMA Finishes
03	605
04	606
09	611
10	612
10B	613
10BE	613E
10BL	613L
14	618
15	619
20D	624
26	625
26D	626
32	629
32D	630
BSP	32DCP
WSP	

Copyright © 1998-2025, SARGENT Manufacturing Company. All rights reserved. Reproduction in whole or in part without the express written permission of SARGENT Manufacturing Company is prohibited. Patent pending and/or patent www.assaabloydss.com/patents.

8900 Mortise Lock Exit Device

SARGENT
ASSA ABLOY

8900 SERIES MORTISE LOCK EXIT DEVICE

8900 Features

- Designed for standard width stile applications on wood and metal doors
- Concealed single point guarded latching for additional security
- Also available as a WS8900 for additional certifications and listings, see Hurricane-Resistant section of this catalog
- Single door applications
- Double door applications with Vertical Rod
- ANSI/BHMA A156.3 - Grade 1
- UL10C (Fire) and UL305 (Panic) Listed

Specifications for 8900 Mortise Lock Exit

Door Type	Metal Doors
Door Thickness	1-3/4" (44mm) minimum thickness. For doors over 1-3/4" to 2 1/4" thick, specify thickness and order as 31-
Stile	4-1/2" (114mm) minimum stile width
Rail sizes as determined by door width	Rails are available in 4 sizes, use door width to determine size needed. Rails will be factory cut to size, if door width is supplied • E Rail for 24" to 32" door widths, No cutting required for 32" door • F Rail for 33" to 36" door widths, No cutting required for 36" door • J Rail for 37" to 42" door widths, No cutting required for 42" door • G Rail for 43" to 48" door widths, No cutting required for 48" door
Strike	C908 Standard Black Nylon Coated – ANSI Prep A115.1 Optional Strikes – 815 Open Back Strike or 908 Flat Lipped Strike with Black Nylon
Dogging Feature	Hex key dogging standard on non fired rated devices; specify 16- for cylinder dogging (#41 cylinder supplied)
Electric Options	AL- Alarm PL- SARGuide™ Photoluminescent Coated 53- LX Latchbolt Monitor 54- Outside Lever Monitoring 55- Request-to-Exit Signal - Rail Monitoring 56- Remote Latch Retraction 58- Electric Dogging 59- Electroguard – Self Contained Delayed Egress
Mounting Fasteners	Supplied standard with wood and machine screws Available with through-bolts and mortise (sex) nuts
Latch Bolt	Brass Nickel Plated, 3/4" (19mm) throw, anti-friction
Guarded/DeadLatch	Brass Nickel Plated, sliding type
Device Centerline from Finished Floor	41" (1041 mm) for Standard Applications; 38" (965mm) for elementary schools
Center Case Dimensions	8-3/8" (213mm) x 2-5/8" (67mm)
Projection	Pushbar Neutral – 3" (76mm) Pushbar Depressed – 2-1/8" (54mm)
Fire Exit Hardware	See Chart – Page 6

C908 Standard Strike

- Curved lip ANSI A-115.1
- Handed. 1-1/4" (32mm) lip standard
- Longer lips in increments of 1/4" (6mm) through 2-7/8" (73mm) available
- Black nylon coated

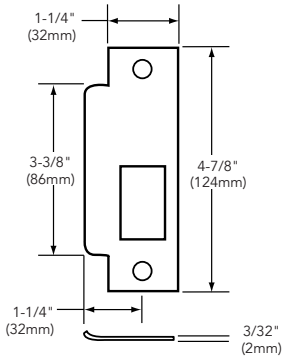

Single Door

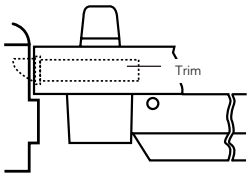

Pair of Doors

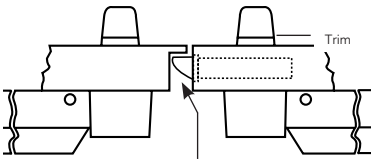

815 Open back strike;
Inactive door with vertical rods

815 Open Back Strike

- ANSI A-115.14 Open Back
- Beveled 1/8" (3mm) in 2" (51mm)
- Specify hand of active door
- Black nylon coat
- "B" label

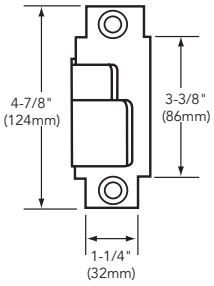

Copyright © 1998-2025, SARGENT Manufacturing Company. All rights reserved. Reproduction in whole or in part without the express written permission of SARGENT Manufacturing Company is prohibited. Patent pending and/or patent www.assaabloydss.com/patents.

8900 Functions and Trims

SARGENT
ASSA ABLOY

How to order:

Options	Series	Function	Rail Lgth	Trim	Hand	Outside Finish	Inside Finish	Door Width
F1-83-	89	13	F	ETL	RHR	26	32	36"

700 Series ET Trim

Exits with ET Trim, specify lever design after the ET designation (e.g., ETL)

Lever Designs for ET Controls

A, B, E, F, J, L, P, W
Also available with Coastal Series & Studio Collection Levers

ET Designation with Suffix (Used to order ET without device)

8900 Series: 704, 706, 710, 713, 715, 716, 740, 743, 744, 773, 774, 775 & 776

Freewheeling Trim

The lever rotates when the door is locked preventing excessive force from being applied to the horizontal lever

Electrified ET Trim and Electrified Mortise Locks

Voltage must be specified for the following functions: 73, 74, 75 and 76.
Specify: 12VDC or 24VDC

SARGENT Function Numbers	ANSI Function Numbers	Description & Cylinder Info (1-3/4" Door)	ANSI Type 3 8900 Panic & Fire
04	03	Night Latch, Key Retracts Latch #46 Cylinder Supplied	8904 x ET_
06	09	Key unlocks Trim, Trim retracts Latch/ Trim relocks when key is removed #41 Cylinder Supplied	8906 x ET_
10	01	No outside operation (No Cylinder)	8910
10	02	No outside operation (No Cylinder) ET Control is used as Pull Only	8910 x ET_
13	08	Key Outside Unlocks/locks Trim #41 Cylinder Supplied	8913 x ET_
15	14	Passage Only (No cylinder)	8915 x ET_
16	10	Key Outside Retracts Latch; Key Inside Unlocks/Locks O/S Trim O/S #46 & I/S #34 Cylinder Supplied	8916 x ET_
40	02	Freewheeling Trim - No outside Operation (No Cylinder) Dummy Trim	8940 x ET_
43	08	Freewheeling Trim - Key Outside Unlocks/locks Trim #41 Cylinder Supplied	8943 x ET_
44	03	Freewheeling Trim - Key Retracts Latch For 1-3/4" Door #46 Cylinder Supplied	8944 x ET_
75*		Electrified ET Trim - Fail Safe, Power Off, Unlocks Lever, Key Retracts Latch For 1-3/4" Door #46 Cylinder Supplied	8975 x ET_
76**		Electrified ET Trim - Fail Secure Power Off, Locks Lever, Key Retracts Latch For 1-3/4" Door #46 Cylinder Supplied	8976 x ET_

Note: Exit devices are available in all standard finishes, except 14, 15, 26 & 26D. With these finishes, exit devices are supplied in 32 or 32D to match accordingly. 32 or 32D is automatically supplied when 26 or 26D is specified. For nickel finishes, specify 14/32 or 15/32D to receive nickel finished trims and stainless exit devices
* 75 Function without cylinder is available as a 73 Function
** 76 Function without cylinder is available as a 74 Function

Options

8900
Mechanical Options:
12-
16-
19-
23-
31-
36-
37-
43-
53-
54-
55-
56-
56-HK-
58-
59-
BC-59-
76-
85-
86-
87-
AL-
BT-
CPC-
LD-
PL-
** SG-
Cylinder Options:
10-
10-21-
10-63-
11-
11-21-
11-60-
11-63-
11-64-
11-70-7P-
11-72-7P-
11-73-7P-
11-65-73-7P-
21-
51-
52-
60-
63-
64-
70-
72-
73-
65-73-
65-73-7P-
73-7P-
81-
82-
F1-82-
83-
F1-83-
84-
BR-
LC-
*SC-
*SE-

* Options are not available with the following functions: 04 x ET, 16, 44, 75 & 76
** Only available with 15, 26D and 32D finishes

Pull & Thumbpiece Trim Section			Trim Designations • Use three letter designations (Ex "PTB") when ordering the Exit Device with trim • Use the six digit designation (Ex "866-MAL") when ordering trim without an Exit Device, always specify finish					Series
SARGENT Function Numbers	ANSI Function Numbers	Description & Cylinder Info (1-3/4" Door)						8900 Panic & Fire
04	03	Night Latch, Key Retracts Latch, #34 Cylinder Supplied	814-FLL	814-FLW	814-MAL	814-PTB	814-STS	8904 x Trim Designation
10	02	No O/S Operation or Cylinder (Pull Only)	810-FLL	810-FLW	810-MAL	810-PTB	810-STS	8910 x Trim Designation
28	15	Passage Only (No cylinder)	828-FLL	828-FLW	828-MAL	828-PTB	828-STS	8928 x Trim Designation
63	05	Key Outside Unlocks/Locks Thumbpiece #34 Cylinder Supplied	866-FLL	866-FLW	866-MAL	866-PTB	866-STS	8963 x Trim Designation

Note: Thumbpiece trims for 63 and 66 function devices are identical and are identified as 66 function when trim is ordered separately.
Note: FLW trim is not available in 32(629) or 32D(630).
Note: Thumbpiece trims used with 8900 mortise lock exit devices are handed.
Note: Pulls and thumb piece trims are not available in 14, 15, 26 or 26D.

Available Finishes

Sargent Finishes	BHMA Finishes
03	605
04	606
09	611
10	612
10B	613
10BE	613E
10BL	613L
14	618
15	619
20D	624
26	625
26D	626
32	629
32D	630
BSP	—
WSP	

Copyright © 1998-2025, SARGENT Manufacturing Company. All rights reserved. Reproduction in whole or in part without the express written permission of SARGENT Manufacturing Company is prohibited. Patent pending and/or patent www.assaabloydss.com/patents.

8700 Surface Vertical Rod Exit Device

SARGENT
ASSA ABLOY

8700 SERIES SURFACE VERTICAL ROD EXIT DEVICE

Features
- Two point latching (top & bottom with adjustability through center case)
- Standard bottom latch compatible with latch track thresholds (by others)
- Single and double door applications
- ANSI/BHMA A156.3 - Grade 1
- UL10C (Fire) and UL305 (Panic) Listed
- Also available as HC8700 for hurricane-resistant applications, see Hurricane-Resistant section of this catalog
- Also available as FM8700, use with StormPro Series doors, frames and hinges is required when used as a certified tornado solution. For tornado-resistant applications, see Tornado-Resistant section of this catalog
- Rods are 1/2" (13mm) brass, bronze or stainless steel

646 Top Strike
- Standard for both Panic & Fire (12-) Hardware
- Surface applied to frame
- Black nylon coated
- Replaces 629 Strike

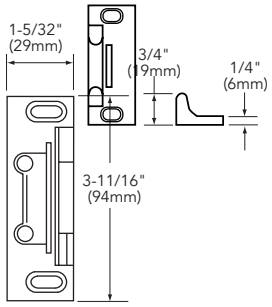

Specifications for 8700 Series Exit

Door Type	Wood or metal doors
Door Thickness	1-3/4" (44mm) minimum thickness. For doors over 1-3/4" to 5" thick, specifythickness and order as 31- (see page 67 for function limitation)
Stile	4-1/2" (114mm) minimum stile width with trim and 3-1/2" (44mm) minimum stile without trim
Rail sizes as determined by door width	Rails are available in 4 sizes, use door width to determine size needed. Rails will be factory cut to size, if door width is supplied • E Rail for 24" to 32" door widths, No cutting required for 32" door • F Rail for 33" to 36" door widths, No cutting required for 36" door • J Rail for 37" to 42" door widths, No cutting required for 42" door • G Rail for 43" to 48" door widths, No cutting required for 48" door
Strike	646 Top Strike (Panic and Fire Rated) 624 Bottom Strike; 655 Fire Rated Bottom Strike
Dogging Feature	Hex key dogging standard on non fired rated devices; specify 16- for cylinder dogging (#41 cylinder supplied)
Electric Options	AL- Alarm PL- SARGuide™ Photoluminescent Coated 53- LX Latchbolt Monitor 54- Outside Lever Monitoring 55- Request-to-Exit Signal - Rail Monitoring 56- ELR Remote Latch Retraction 58- Electric Dogging 59- Electroguard – Self Contained Delayed Egress
Mounting Fasteners	Supplied standard with wood and machine screws Available with through-bolts and mortise (sex) nuts
Top & Bottom Bolt	Brass, Stainless steel
Device Centerline from	41" (1041 mm) for Standard Applications; 38" (965mm) for elementary schools
Door/Opening Height	Must be specified - 120" (3048mm) Max Door Opening - Non-fire rated doors 96" (2438mm) Max Door Opening - Fire rated doors
Center Case Dimensions	8-3/8" (213mm) x 2-5/8" (67mm)
Projection	Pushbar Neutral – 3" (76mm) Pushbar Depressed – 2-1/8" (54mm)
Fire Exit Hardware	See Chart – Page 6

Note: The 8700 Exit Device can not be used less bottom rod. If less bottom rod is desired, specify NB8700 Series Exit Device

624 Bottom Strike
- Standard for 8700
- Applied to surface of floor or to a flat threshold
- Black nylon coated

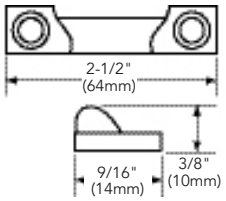

655 Bottom Strike
- Standard for 12-8700 and 14-8700
- Stainless steel
- Black nylon coated
- Replaces 647 Strike

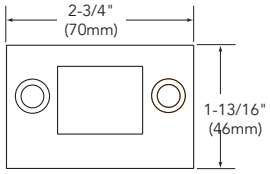

Inside Lever Assembly for 300 Series Aux Control

Attaches to top rod and engages with 300 Series Auxiliary Control. Packed standard with 306 and 313 Auxiliary Controls

Part # 97-2378

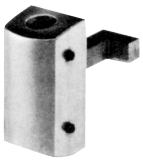

Note: 26 or 26D is automatically supplied when 32 or 32D is specified.

648 & 653 STRIKES (ALTERNATE STRIKES FOR 8700 SVR DEVICES)

648 Strike
For doors having transom panel applications
Black nylon coated

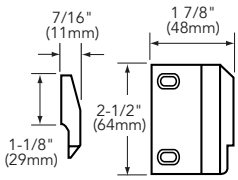

653 Strike
Alternate for 12-8700

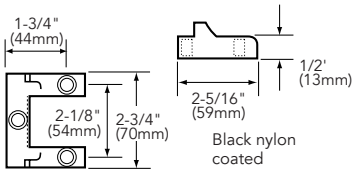

Copyright © 1998-2025, SARGENT Manufacturing Company. All rights reserved. Reproduction in whole or in part without the express written permission of SARGENT Manufacturing Company is prohibited. Patent pending and/or patent www.assaabloydss.com/patents.

8700 Functions and Trims

SARGENT
ASSA ABLOY

How to order:

Options	Series	Function	Rail Lgth	Trim	Hand	Outside Finish	Inside Finish	Door Width	Door Height	AFF
F1-83-	87	13	F	ETL	RHR	32D	10B	36"	84"	41"

700 Series ET Trim
Exits with ET Trim, specify lever design after the ET designation (e.g., ETL)

Lever Designs for ET Controls
A, B, E, F, J, L, P, W
Also available with Coastal Series & Studio Collection Levers

ET Designation with Suffix (Used to order ET without device)
8700 Series: 706, 710, 713, 715, 740, 743, 744, 746, 773 & 774

Freewheeling Trim
The lever rotates when the door is locked preventing excessive force from being applied to the horizontal lever.

Electrified ET Trim
Voltage must be specified for the following functions: 73 and 74. Specify: 12VDC or 24VDC

SARGENT Function Numbers	ANSI Function Numbers	Description & Cylinder Info. (1-3/4" Door)	ANSI Type 2 8700 Panic & Fire
06	09	Key unlocks Trim, Trim retracts latch/ Trim relocks when key is removed #41 Cylinder Supplied	8706 x ET_
10	01	No outside operation (No Cylinder)*	8710
10	02	No outside operation (No Cylinder)* ET Control is used as Pull Only	8710 x ET_
13	08	Key Outside Unlocks/locks Trim #41 Cylinder Supplied	8713 x ET_
15	14	Passage Only (No cylinder)	8715 x ET_
40	02	Freewheeling Trim - No outside Operation (No Cylinder)* Dummy Trim	8740 x ET_
43	08	Freewheeling Trim - Key Outside Unlocks/locks Trim #41 Cylinder Supplied	8743 x ET_
46	09	Freewheeling Trim - Key unlocks Trim, Trim retracts latch/ relocks when key is removed #41 Cylinder Supplied	8746 x ET_
73		Electrified ET Trim - Fail Safe Power Off, Unlocks Lever (No Cylinder)*	8773 x ET_
74		Electrified ET Trim - Fail Secure Power Off, Locks Lever (No Cylinder)*	8774 x ET_

Note: Exit devices are available in all standard finishes, except 14, 15, 26 & 26D. With these finishes, exit devices are supplied in 32 or 32D to match accordingly. 32 or 32D is automatically supplied when 26 or 26D is specified. For nickel finishes, specify 14/32 or 15/32D to receive nickel finished trims and stainless exit devices.
Note: AFF means Above Finished Floor, center line of rail Above Finished Floor
* Cylinder Override is available with a 306 Aux Control
Example Order: 8773F 12V x ETMG x 306 x RHR x 32D x 36"w x 84"h

300 Series++ Auxiliary Control & 862 Pull		SARGENT Function Numbers	ANSI Function Numbers	Description & Cylinder Info. (1-3/4" Door)	8700 Panic & Fire
300 Series Aux. Control	862 Pull	06	12	Key unlocks Turn; Turn retracts latch/Turn relocks when key is removed, #41 Cylinder Supplied	8710 x 306
		10	02	862 Pull Only (Optional Pulls: 863 & 864)	8710 x 862
		13	11	Key Outside Unlocks/locks Turn #41 Cylinder Supplied	8710 x 313

Notes:
300 Series Auxiliary Control are not compatible with 59- option.
When ordering 8700 Series Exit Device x 300 Series Aux. Control, specify 10 Function for the exit. Example: 8710F x 306 x RHR x 32D x 42" x 90"
++ Note: Exit Devices must be mounted 38" AFF when used with Auxiliary Controls to meet ICC/ANSI A117.1-2003 Accessible and Usable and Facilities Code

Pull & Thumbpiece Trim Section			Trim Designations • Use three letter designations (Ex "PTB") when ordering the Exit Device with trim • Use the six digit designation (Ex "866-MAL") when ordering trim without an Exit Device, always specify finish					
SARGENT Function Numbers	ANSI Function Numbers	Description & Cylinder Info. (1-3/4" Door)						8700 Panic & Fire
10	02	Pull Only (No Cylinder)*	810-FLL	810-FLW	810-MAL	810-PTB	810-STS	8710 x Trim Designation
28	15	Passage Only (No cylinder)	828-FLL	828-FLW	828-MAL	828-PTB	828-STS	8728 x Trim Designation
62	06	Key unlocks Thumbpiece, Thumbpiece retracts latch/ Thumbpiece relocks when key is removed #34 Cylinder Supplied	866-FLL	866-FLW	866-MAL	866-PTB	866-STS	8762 x Trim Designation
63	05	Key Outside Unlocks/locks Thumbpiece, #34 Cylinder Supplied	866-FLL	866-FLW	866-MAL	866-PTB	866-STS	8763 x Trim Designation

* Cylinder Override is available with a 306 Aux Control.
Note: Thumbpiece trims for 62 and 63 function devices are identical and are identified as 66 function when trim is ordered separately.
Note: FLW trim is not available in 32(629) or 32D(630).
Note: Pulls and thumb piece trims are not available in 14, 15, 26 or 26D.

Options

8700
Mechanical Options:
12-
14-
16-
19-
31-
36-
37-
43-
53-
54-
55-
56-
56-HK-
58-
59-
BC-59-
76-
85-
86-
87-
5CH-
AL-
BT-
CPC-
LD-
PL-
*SG-
TB-
Cylinder Options:
10-
10-21-
10-63-
11-
11-21-
11-60-
11-63-
11-64-
11-70-7P-
11-72-7P-
11-73-7P-
11-65-73-7P-
21-
51-
52-
60-
63-
64-
70-
72-
73-
65-73-
65-73-7P-
73-7P-
81-
82-
F1-82-
83-
F1-83-
84-
BR-
LC-
SC-
SE-

* Only available with 15, 26D and 32D finishes

Available Finishes

Sargent Finishes	BHMA Finishes
03	605
04	606
09	611
10	612
10B	613
10BE	613E
10BL	613L
14	618
15	619
20D	624
26	625
26D	626
32	629
32D	630
BSP	—
WSP	

Copyright © 1998-2025, SARGENT Manufacturing Company. All rights reserved. Reproduction in whole or in part without the express written permission of SARGENT Manufacturing Company is prohibited. Patent pending and/or patent www.assaabloydss.com/patents.

SARGENT
ASSA ABLOY

NB-8700 Top Latch Surface Vertical Rod Exit Device

Features
- Single point top latching
- Top latchbolt projection adjustable through center case
- ANSI/BHMA A156.3 - Grade 1
- UL10C (Fire) and UL305 (Panic) Listed
- Tripping potential removed - no bottom strike
- Rods are 1/2" (13mm) brass, bronze or stainless steel

Specifications for NB-8700 Series Exi

Door Type	Wood or metal doors
Door Thickness	1-3/4" (44mm) minimum thickness. For doors over 1-3/4" to 5" thick, specify thickness and order as 31- (see page 67 for function limitation)
Stile	4-1/2" (114mm) minimum stile with trim and 3-1/2" (44mm) minimum stile without trim
Rail sizes as determined by door width	Rails are available in 4 sizes, use door width to determine size needed. Rails will be factory cut to size, if door width is supplied • E Rail for 24" to 32" door widths, No cutting required for 32" door • F Rail for 33" to 36" door widths, No cutting required for 36" door • J Rail for 37" to 42" door widths, No cutting required for 42" door • G Rail for 43" to 48" door widths, No cutting required for 48" door
Strike	646 Top Strike (Panic and Fire Rated)
Dogging Feature	Hex key dogging standard on non fired rated devices; specify 16- forcylinder dogging (#41 cylinder supplied)
Electric Options	AL- Alarm PL- SARGuide Photoluminescent Coated 53- LX Latchbolt Monitor 54- Outside Lever Monitoring 55- Request-to-Exit Signal - Rail Monitoring 56- Remote Latch Retraction 58- Electric Dogging 59- Delayed Egress
Mounting Fasteners	Supplied standard with wood and machine screws Available with through-bolts and mortise (sex) nuts
Top Bolt	Stainless steel
Device Centerline from Finished Floor	41" (1041mm) for Standard Applications
Door/Opening Height	**Must be specified** - 120" (3048mm) Max Door Opening
Center Case Dimensions	8-3/8" (213mm) x 2-5/8" (67mm)
Projection	Pushbar Neutral – 3" (76 mm) Pushbar Depressed – 2-1/8" (54 mm)
Fire Exit Hardware	See Chart – Page 6

646 Top Strike
- Standard for both Panic & Fire (12-) Hardware
- Surface applied
- Fire Rated
- Black nylon coated

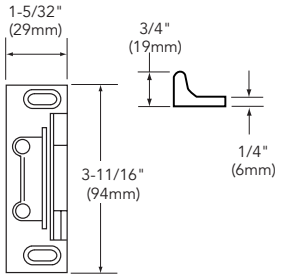

Copyright © 1998-2025, SARGENT Manufacturing Company. All rights reserved. Reproduction in whole or in part without the express written permission of SARGENT Manufacturing Company is prohibited. Patent pending and/or patent www.assaabloydss.com/patents.

NB-8700 Functions and Trims

SARGENT
ASSA ABLOY

How to order:

Options	Series	Function	Rail Lgth	Trim	Hand	Outside Finish	Inside Finish	Door Width	Door Height	AFF
12-	NB-87	13	F	ETL	RHR	26D	32D	36"	84"	41"

700 Series ET Trim
Exits with ET Trim, specify lever design after the ET designation (e.g., ETL)

Lever Designs for ET Controls
A, B, E, F, J, L, P, W
Also available with Coastal Series & Studio Collection Levers

ET Designation with Suffix (Used to order ET without device)
NB-8700 Series: 706, 710, 713, 715, 740,743, 744, 746, 773 & 774

Freewheeling Trim
The lever rotates when the door is locked preventing excessive force from being applied to the horizontal lever

Electrified ET Trim
Voltage must be specified for the following functions: 73 and 74.
Specify: 12VDC or 24VDC

SARGENT Function Numbers	ANSI Function Numbers	Description & Cylinder Info (1-3/4" Door)	ANSI Type 2 NB-8700 (Panic & Fire)
06	09	Key unlocks Trim. Trim retracts latch.Trim relocks when key is removed. #41 Cylinder Supplied.	NB-8706 x ET_
10	01	No outside operation (No Cylinder)	NB-8710
10	02	No outside operation (No Cylinder) ET Control is used as Pull Only	NB-8710 x ET_
13	08	Key Outside unlocks/locks trim #41 Cylinder Supplied	NB-8713 x ET_
15	14	Passage Only (No cylinder)	NB-8715 x ET_
40	02	Freewheeling Trim - No outside operation (No Cylinder) Dummy Trim	NB-8740 x ET_
43	08	Freewheeling Trim - Key Outside Unlocks/locks Trim #41 Cylinder Supplied	NB-8743 x ET_
46	09	Freewheeling Trim - Key unlocks Trim, Trim retracts latch/relocks when key is removed. #41 Cylinder Supplied/	NB-8746 x ET_
73		Electrified ET Trim - Fail Safe Power Off, Unlocks Lever (No Cylinder)*	NB-8773 x ET_
74		Electrified ET Trim - Fail Secure Power Off, Locks Lever (No Cylinder)*	NB-8774 x ET_

Note: Exit devices are available in all standard finishes, except 14, 15, 26 & 26D. With these finishes, exit devices are supplied in 32 or 32D to match accordingly. 32 or 32D is automatically supplied when 26 or 26D is specified. For nickel finishes, specify 14/32 or 15/32D to receive nickel finished trims and stainless exit devices
Note: AFF means Above Finished Floor, center line of rail Above Finished Floor
Note: 12-NB8700 devices require thermal pins
Note: 12-NB Applications require thermal pin. Thermal Pin supplied when ordered as a 12-NB Device.
*Cylinder Override is available with a 306 Aux Control

300 Series++ Auxiliary Control & 862 Pull		SARGENT Function Numbers	ANSI Function Numbers	Description & Cylinder Info. (1-3/4" Door)	NB-8700 Panic & Fire
300 Series Aux. Control	862 Pull	06	12	Key unlocks Turn; Turn retracts latch/Turn relocks when key is removed, #41 Cylinder Supplied	NB-8710 x 306
		10	02	862 Pull Only (Optional Pulls: 863 & 864)	NB-8710 x 862
		13	11	Key Outside Unlocks/locks Turn #41 Cylinder Supplied	NB-8710 x 313

Notes:
300 Series Auxiliary Control are not compatible with 59- option.
When ordering NB-8700 Series Exit Device x 300 Series Aux. Control, specify 10 Function for the exit. Example: NB-8710F x 306 x RHR x 32D x 42" x 90"
++ Note: Exit Devices must be mounted 38" AFF when used with Auxiliary Controls to meet ICC/ANSI A117.1-2003 Accessible and Usable and Facilities Code

Pull & Thumbpiece Trim Section			Trim Designations • Use three letter designations (Ex "PTB") when ordering the Exit Device with trim • Use the six digit designation (Ex "866-MAL") when ordering trim without an Exit Device, always specify finish					
SARGENT Function Numbers	ANSI Function Numbers	Description & Cylinder Info. (1-3/4" Door)						NB-8700 Panic & Fire
10	02	Pull Only (No Cylinder)*	810-FLL	810-FLW	810-MAL	810-PTB	810-STS	NB-8710 x Trim Designation
28	15	Passage Only (No cylinder)	828-FLL	828-FLW	828-MAL	828-PTB	828-STS	NB-8728 x Trim Designation
62	06	Key unlocks Thumbpiece, Thumbpiece retracts latch/ Thumbpiece relocks when key is removed #34 Cylinder Supplied	866-FLL	866-FLW	866-MAL	866-PTB	866-STS	NB-8762 x Trim Designation
63	05	Key Outside Unlocks/locks Thumbpiece, #34 Cylinder Supplied	866-FLL	866-FLW	866-MAL	866-PTB	866-STS	NB-8763 x Trim Designation

* Cylinder Override is available with a 306 Aux Control.
Note: Thumbpiece trims for 62 and 63 function devices are identical and are identified as 66 function when trim is ordered separately.
Note: FLW trim is not available in 32(629) or 32D(630).
Note: Pulls and thumb piece trims are not available in 14, 15, 26 or 26D.

Options

NB-8700
Mechanical Options:
12-
16-
19-
31-
36-
37-
43-
53-
54-
55-
56-
56-HK-
58-
59-
76-
85-
86-
87-
5CH-
AL-
BT-
CPC-
LD-
PL-
* SG-
TB-
Cylinder Options:
10-
10-21-
10-63-
11-
11-21-
11-60-
11-63-
11-64-
11-70-7P-
11-72-7P-
11-73-7P-
11-65-73-7P-
21-
51-
52-
60-
63-
64-
70-
72-
73-
65-73-
65-73-7P-
73-7P-
81-
82-
F1-82-
83-
F1-83-
84-
BR-
LC-
SC-
SE-

* Only available with 15, 26D and 32D finishes

Available Finishes

Sargent Finishes	BHMA Finishes
03	605
04	606
09	611
10	612
10B	613
10BE	613E
10BL	613L
14	618
15	619
20D	624
26	625
26D	626
32	629
32D	630
BSP	—
WSP	

Copyright © 1998-2025, SARGENT Manufacturing Company. All rights reserved. Reproduction in whole or in part without the express written permission of SARGENT Manufacturing Company is prohibited. Patent pending and/or patent www.assaabloydss.com/patents.

SARGENT
ASSA ABLOY

MD8600(Windstorm Rated) and NB-MD8600 Concealed Vertical Rod Exit Device for Metal Doors

MD8600 SERIES CONCEALED VERTICAL ROD EXIT DEVICE FOR METAL DOORS

Features
- Designed for standard width stile applications on hollow metal doors
- Concealed rods for security and aesthetics
- Single and double door applications
- Specify NB- for less bottom rod
  – NB not available with HC and WS options
- Devices are ANSI A156.3 - Grade 1
- UL Fire and Panic listed

Specifications for MD8600 & NB-MD8600 Series Exit

Door Type	Metal doors
Door Thickness	1-3/4" (44mm) minimum thickness. For doors over 1-3/4" to 2-1/4" thick, specify thickness and order as 31-
Cladding	Available for 1/4" on 1/2" panels. Specify 31- and panel thickness on order. Only available on 1-3/4" door thickness. Must be noted separately from door thickness on order string.
Stile	4-1/2" (114mm) minimum stile width
Rail sizes as determined by door width	Rails are available in 4 sizes, use door width to determine size needed. Rails will be factory cut to size, if door width is supplied • E Rail for 24" to 32" door widths, No cutting required for 32" door • F Rail for 33" to 36" door widths, No cutting required for 36" door • J Rail for 37" to 42" door widths, No cutting required for 42" door • G Rail for 43" to 48" door widths, No cutting required for 48" door
Strike	650 Top Strike & 606 Bottom Strike (Panic and Fire Rated)
Dogging Feature	Hex key dogging standard on non fired rated devices; specify 16- for cylinder dogging (#41 cylinder supplied)
Electric Options	AL- Alarm PL- SARGuide Photoluminescent Coated 53- LX Latchbolt Monitor 54- Outside Lever Monitoring 55- Request-to-Exit Signal - Rail Monitoring 56- Remote Latch Retraction 58- Electric Dogging 59- Delayed Egress
Mounting Fasteners	Supplied standard with machine screws
Top Bolt	Stainless steel
Device Centerline from Finished Floor	41" (1041mm) for Standard Applications 38" (965mm) for elementary schools
Door/Opening Height	**Must be specified** - 120" (3048mm) Max Door Opening 96" max door height for HC and WS options
Center Case Dimensions	8-3/8" (213mm) x 2-5/8" (67mm)
Projection	Pushbar Neutral – 3" (76 mm) Pushbar Depressed – 2-1/8" (54 mm)
Fire Exit Hardware	See Chart – Page 6

Notes:
- MD8600 & 12-MD8600 can be used as NB- Device by simply not installing the bottom rod/bolt
- 12-NB Applications require thermal pin. Thermal Pin supplied when ordered as a 12-NB Device.
- Must include "WS" option in the order string to specify Windstorm Rated product.

100 Series Aux Control
- Available as an 06 or 13 function
- Supplied with a SARGENT #41 Mortise Cylinder
- Can be used with any SARGENT Mortise Key System

650 Top strike
- For application In hollow metal frames
- Stainless steel nylon coated

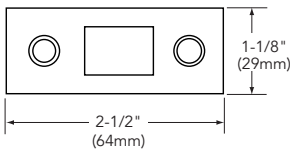

606 Bottom strike
- Furnished with expansion shields
- Mortised into floor
- Stainless steel

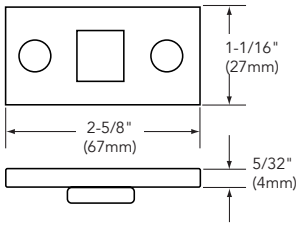

Copyright © 1998-2025, SARGENT Manufacturing Company. All rights reserved. Reproduction in whole or in part without the express written permission of SARGENT Manufacturing Company is prohibited. Patent pending and/or patent www.assaabloydss.com/patents.

MD8600 and NB-MD8600 Functions and Trims for Metal Doors

SARGENT
ASSA ABLOY

How to order:

Options	Series	Function	Rail Lgth	Trim	Hand	Outside Finish	Inside Finish	Door Width	Door Height	AFF
59-NB-	MD86	13	F	ETL	RHR	03	03	36"	84"	42"

ANSI Type 8

700 Series ET Trim

Exits with ET Trim, specify lever design after the ET designation (e.g., ETL)

Lever Designs for ET Controls

A, B, E, F, J, L, P, W
Also available with Coastal Series & Studio Collection Levers

ET Designation with Suffix (Used to order ET without device)

MD8600 & NB-MD8600 Series: 706-4, 710-4, 713-4, 715-4, 740-4, 743-4, 746-4, 773-4, & 774-4

Freewheeling Trim

The lever rotates when the door is locked preventing excessive force from being applied to the horizontal lever

Electrified ET Trim

Voltage must be specified for the following functions: 73 and 74.
Specify: 12VDC or 24VDC

SARGENT Function Numbers	ANSI Function Numbers	Description & Cylinder Info (1-3/4" Door)	MD8600 Panic & Fire
06	09	Key unlocks Trim, Trim retracts latch/ Trim relocks when key is removed #41 Cylinder Supplied	MD8606 x ET_
10	01	No outside operation (No Cylinder)*	MD8610
10	02	No outside operation (No Cylinder)* ET Control is used as Pull Only	MD8610 x ET_
13	08	Key Outside Unlocks/locks Trim #41 Cylinder Supplied	MD8613 x ET_
15	14	Passage Only (No cylinder)	MD8615 x ET_
40	02	Freewheeling Trim - No outside Operation (No Cylinder)** Dummy Trim	MD8640 x ET_
43	08	Freewheeling Trim - Key Outside Unlocks/locks Trim #41 Cylinder Supplied	MD8643 x ET_
46	09	Freewheeling Trim - Key unlocks Trim, Trim retracts latch/ Trim relocks when key is removed #41 Cylinder Supplied	MD8646 x ET_
73		Electrified ET Trim - Fail Safe Power Off, Unlocks Lever (No Cylinder)*	MD8673 x ET_
74		Electrified ET Trim - Fail Secure Power Off, Locks Lever (No Cylinder)*	MD8674 x ET_

Note: Exit devices are available in all standard finishes, except 14, 15, 26 & 26D. With these finishes, exit devices are supplied in 32 or 32D to match accordingly. 32 or 32D is automatically supplied when 26 or 26D is specified. For nickel finishes, specify 14/32 or 15/32D to receive nickel finished trims and stainless exit devices.

Note: AFF means Above Finished Floor, center line of rail Above Finished Floor.
* Cylinder Override is available with a 106 Aux Control
Example Order: MD8673F 12V x ETMG x 106 x RHR x 32D x 36"w x 84"h

100 Series Auxiliary Control* & 862 Pull		SARGENT Function Numbers	ANSI Function Numbers	Description & Cylinder Info. (1-3/4" Door)	MD8600 Panic & Fire
100 Series Aux. Control	862 Pull	06	12	Key unlocks Turn; Turn retracts latch/Turn relocks when key is removed, #41 Cylinder Supplied	MD8610 x 106
		10	02	862 Pull Only (Optional Pulls: 863 & 864)	MD8610 x 862 Pull
		13	11	Key Outside Unlocks/locks Turn #41 Cylinder Supplied	MD8610 x 113

Note: When ordering MD8600/NB-MD8600 Series Exit Device x 100 Series Aux. Control, specify 10 Function for the exit.
Example: MD8610F x 106 x RHR x 32D x 42" x 90"

Options

MD8600
Mechanical Options:
12-
16-
19-
31-
36-
37-
43-
53-
54-
55-
56-
56-HK-
5LH
58-
59-
BC-59-
76-
85-
86-
87-
AL-
BT-
CPC-
HC-
LD-
NB-
PL-
* SG-
WS-
Cylinder Options:
10-
10-21-
10-63-
11-
11-21-
11-60-
11-63-
11-64-
11-70-7P-
11-72-7P-
11-73-7P-
11-65-73-7P-
21-
51-
52-
60-
63-
64-
70-
72-
73-
65-73-
65-73-7P-
73-7P-
81-
82-
F1-82-
83-
F1-83-
84-
BR-
LC-
SC-
SE-

* Only available with 15, 26D and 32D finishes

Available Finishes

Sargent Finishes	BHMA Finishes
03	605
04	606
09	611
10	612
10B	613
10BE	613E
10BL	613L
14	618
15	619
20D	624
26	625
26D	626
32	629
32D	630
BSP	—
WSP	

Copyright © 1998-2025, SARGENT Manufacturing Company. All rights reserved. Reproduction in whole or in part without the express written permission of SARGENT Manufacturing Company is prohibited. Patent pending and/or patent www.assaabloydss.com/patents.

AD8600 and NB-AD8600 Concealed Vertical Rod Exit Device for Aluminum Doors

SARGENT
ASSA ABLOY

AD8600 SERIES CONCEALED VERTICAL ROD EXIT DEVICE FOR ALUMINUM DOORS

FEATURES

- Designed for standard width stile applications on aluminum doors
- Concealed rods for security and aesthetics
- Single and double door applications
- Specify NB- for less bottom rod
- Devices are ANSI/BHMA A156.3 - Grade 1
- UL305 (Panic) listed only

Specifications for AD8600 & NB-AD8600 Series Exit

Door Type	Aluminum Doors
Door Thickness	1-3/4" (44mm) minimum thickness. For doors over 1-3/4" to 2-1/4" thick, specify thickness and order as 31-
Cladding	Available for 1/4" on 1/2" panels. Specify 31- and panel thickness on order. Only available on 1-3/4" door thickness. Must be noted separately from door thickness on order string.
Stile	4-1/2" (114mm) minimum stile width
Rail sizes as determined by door width	Rails are available in 4 sizes, use door width to determine size needed. Rails will be factory cut to size, if door width is supplied • E Rail for 24" to 32" door widths, No cutting required for 32" door • F Rail for 33" to 36" door widths, No cutting required for 36" door • J Rail for 37" to 42" door widths, No cutting required for 42" door • G Rail for 43" to 48" door widths, No cutting required for 48" door
Strike	640 Strikes for Top & Bottom Strike
Dogging Feature	Hex key dogging standard on non fired rated devices; specify 16- for cylinder dogging (#41 cylinder supplied)
Electric Options	AL- Alarm PL- SARGuide Photoluminescent Coated 53- LX Latchbolt Monitor 54- Outside Lever Monitoring 55- Request-to-Exit Signal - Rail Monitoring 56- Remote Latch Retraction 58- Electric Dogging 59- Delayed Egress
Mounting Fasteners	Supplied standard with machine screws
Top Bolt	Stainless steel
Device Centerline from Finished Floor	41" (1041mm) for Standard Applications 38" (965mm) for elementary schools
Door/Opening Height	Must be specified - 120" (3048mm) Max Door Opening
Center Case Dimensions	8-3/8" (213mm) x 2-5/8" (67mm)
Projection	Pushbar Neutral – 3" (76 mm) Pushbar Depressed – 2-1/8" (54 mm)
Fire Exit Hardware	Not Available

NB-AD8600 **AD8600**

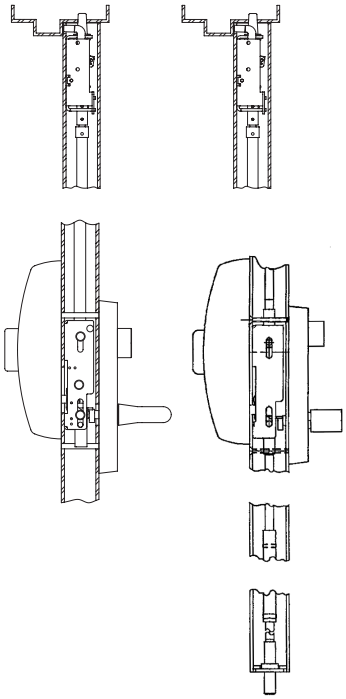

Note: AD8600 can be used as NB- Device by simply not installing the bottom rod/bolt

100 Series Aux Control

- Available as an 06 or 13 function
- Supplied with a SARGENT #41 Mortise Cylinder
- Can be used with any SARGENT Mortise Key System

639/640 Strike Kits

- Steel with Black Nylon Coating
- Machine Screws Supplied
- 640 Kit contains 2 strikes (Top & Bottom)
- 639 Kit contains 1 strike (Top Only)

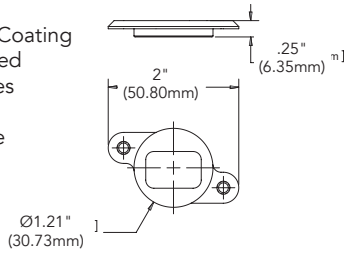

Copyright © 1998-2025, SARGENT Manufacturing Company. All rights reserved. Reproduction in whole or in part without the express written permission of SARGENT Manufacturing Company is prohibited. Patent pending and/or patent www.assaabloydss.com/patents.

AD8600 and NB-AD8600 Functions and Trims for Aluminum Doors

SARGENT
ASSA ABLOY

How to order:

Options	Series	Function	Rail Lgth	Trim	Hand	Outside Finish	Inside Finish	Door Width	Door Height	AFF
56-NB-	AD86	13	F	ETL	RHR	15	32D	36"	84"	41"

700 Series ET Trim
Exits with ET Trim, specify lever design after the ET designation (e.g., ETL)

Lever Designs for ET Controls
A, B, E, F, J, L, P, W
Also available with Coastal Series & Studio Collection Levers

ET Designation with Suffix (Used to order ET without device)
AD8600 & NB-AD8600 Series: 706-4, 710-4, 713-4, 715-4, 740-4, 743-4, 746-4, 773-4, & 774-4

Freewheeling Trim
The lever rotates when the door is locked preventing excessive force from being applied to the horizontal lever

Electrified ET Trim
Voltage must be specified for the following functions: 73 and 74.
Specify: 12VDC or 24VDC

SARGENT Function Numbers	ANSI Function Numbers	Description & Cylinder Info (1-3/4" Door)	ANSI Type 8 AD8600 Panic
06	09	Key unlocks Trim, Trim retracts latch/ Trim relocks when key is removed #41 Cylinder Supplied	AD8606 x ET_
10	01	No outside operation (No Cylinder)*	AD8610
10	02	No outside operation (No Cylinder)* ET Control is used as Pull Only	AD8610 x ET_
13	08	Key Outside Unlocks/locks Trim #41 Cylinder Supplied	AD8613 x ET_
15	14	Passage Only (No cylinder)	AD8615 x ET_
40	02	Freewheeling Trim - No outside operation (No Cylinder)* Dummy Trim	AD8640 x ET_
43	08	Freewheeling Trim - Key Outside Unlocks/locks Trim #41 Cylinder Supplied	AD8643 x ET_
46	09	Freewheeling Trim - Key unlocks Trim, Trim retracts latch/ Trim relocks when key is removed #41 Cylinder Supplied	AD8646 x ET_
73		Electrified ET Trim - Fail Safe Power Off, Unlocks Lever (No Cylinder)*	AD8673 x ET_
74		Electrified ET Trim - Fail Secure Power Off, Locks Lever (No Cylinder)*	AD8674 x ET_

Note: Exit devices are available in all standard finishes, except 14, 15, 26 & 26D. With these finishes, exit devices are supplied in 32 or 32D to match accordingly. 32 or 32D is automatically supplied when 26 or 26D is specified. For nickel finishes, specify 14/32 or 15/32D to receive nickel finished trims and stainless exit devices
Note: AFF means Above Finished Floor, center line of rail Above Finished Floor
* Cylinder Override is available with a 106 Aux Control
Example Order: AD8673F 12V x ETMG x 106 x RHR x 32D x 36"w x 84"h

100 Series Auxiliary Control* & 862 Pull		SARGENT Function Numbers	ANSI Function Numbers	Description & Cylinder Info. (1-3/4" Door)	AD8600 Panic
100 Series Aux. Control	862 Pull	06	12	Key unlocks Turn; Turn retracts latch/Turn relocks when key is removed, #41 Cylinder Supplied	AD8610 x 106
		10	02	862 Pull Only (Optional Pulls: 863 & 864)	AD8610 x 862 Pull
		13	11	Key Outside Unlocks/locks Turn #41 Cylinder Supplied	AD8610 x 113

Note: When ordering AD8600/NB-AD8600 Series Exit Device x 100 Series Aux. Control, specify 10 Function for the exit.
Example: AD8610F x 106 x RHR x 32D x 42" x 90"

Options

AD8600
Mechanical Options:
16-
19-
31-
36-
37-
43-
53-
54-
55-
56-
56-HK-
5LH
58-
59-
BC-59-
76-
85-
86-
87-
AL-
BT-
CPC-
LD-
NB-
PL-
* SG-
Cylinder Options:
10-
10-21-
10-63-
11-
11-21-
11-60-
11-63-
11-64-
11-70-7P-
11-72-7P-
11-73-7P-
11-65-73-7P-
21-
51-
52-
60-
63-
64-
70-
72-
73-
65-73-
65-73-7P-
73-7P-
81-
82-
F1-82-
83-
F1-83-
84-
BR-
LC-
SC-
SE-

* Only available with 15, 26D and 32D finishes

Available Finishes

Sargent Finishes	BHMA Finishes
03	605
04	606
09	611
10	612
10B	613
10BE	613E
10BL	613L
14	618
15	619
20D	624
26	625
26D	626
32	629
32D	630
BSP	—
WSP	

Copyright © 1998-2025, SARGENT Manufacturing Company. All rights reserved. Reproduction in whole or in part without the express written permission of SARGENT Manufacturing Company is prohibited. Patent pending and/or patent www.assaabloydss.com/patents.

SARGENT
ASSA ABLOY

WD8600 and NB-WD8600 Concealed Vertical Rod Exit Device for Wood Doors

WD8600 SERIES CONCEALED VERTICAL ROD EXIT DEVICE FOR WOOD DOORS

Features
- Designed for standard width stile applications on wood doors
- Concealed rods offer security
- Single and double door applications
- Specify NB- for less bottom rod
- Devices are ANSI/BHMA A156.3 - Grade 1
- UL10C (Fire) and UL305 (Panic) listed

Specifications for WD8600 & NB-WD8600 Series Exit

Door Type	Wood Doors
Door Thickness	1-3/4" (44mm) minimum thickness. For doors over 1-3/4" to 2-1/4" thick, specify thickness and order as 31-
Cladding	Available for 1/4" on 1/2" panels. Specify 31- and panel thickness on order. Only available on 1-3/4" door thickness. Must be noted separately from door thickness on order string.
Stile	4-1/2" (114mm) minimum stile width
Rail sizes as determined by door width	Rails are available in 4 sizes, use door width to determine size needed. Rails will be factory cut to size, if door width is supplied • E Rail for 24" to 32" door widths, No cutting required for 32" door • F Rail for 33" to 36" door widths, No cutting required for 36" door • J Rail for 37" to 42" door widths, No cutting required for 42" door • G Rail for 43" to 48" door widths, No cutting required for 48" door
Strike	650 Top Strike & 606 Bottom Strike (Panic and Fire Rated)
Dogging Feature	Hex key dogging standard on non fired rated devices; specify 16- for cylinder dogging (#41 cylinder supplied)
Electric Options	AL- Alarm PL- SARGuide Photoluminescent Coated 53- LX Latchbolt Monitor 54- Outside Lever Monitoring 55- Request-to-Exit Signal - Rail Monitoring 56- Remote Latch Retraction 58- Electric Dogging 59- Delayed Egress
Mounting Fasteners	Supplied standard with wood screws
Top Bolt	Stainless steel
Device Centerline from Finished Floor	41" (1041mm) for Standard Applications 38" (965mm) for elementary schools
Door/Opening Height	**Must be specified** - 108" (2743mm) Max Door Opening - Fire rated doors 120" (3048mm) Max Door Opening - Non-fire rated doors
Center Case Dimensions	8-3/8" (213mm) x 2-5/8" (67mm)
Projection	Pushbar Neutral – 3" (76 mm) Pushbar Depressed – 2-1/8" (54 mm)
Fire Exit Hardware	See Chart – Page 6

Note: WD8600 & 12-WD8600 can be used as NB- Device by simply not installing the bottom rod/bolt
Note: 12-NB applications require thermal pin. Thermal pin supplied when ordered as a 12-NB device

100 Series Aux Control
- Available as an 06 or 13 function
- Supplied with a SARGENT #41 Mortise Cylinder
- Can be used with any SARGENT Mortise Key System

650 Top Strike
- For application in hollow metal frames
- Stainless steel

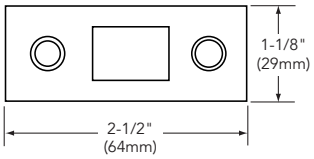

606 Bottom Strike
- Furnished with expansion shields
- Mortised into floor
- Stainless steel

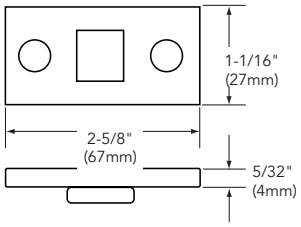

Copyright © 1998-2025, SARGENT Manufacturing Company. All rights reserved. Reproduction in whole or in part without the express written permission of SARGENT Manufacturing Company is prohibited. Patent pending and/or patent www.assaabloydss.com/patents.

SARGENT
ASSA ABLOY

WD8600 and NB-WD8600 Functions and Trims for Wood Doors

How to order:

Options	Series	Function	Rail Lgth	Trim	Hand	Outside Finish	Inside Finish	Door Width	Door Height	AFF
58-NB-	WD86	13	F	ETL	RHR	26D	32D	36"	84"	41"

700 Series ET Trim
Exits with ET Trim, specify lever design after the ET designation (e.g., ETL)

Lever Designs for ET Controls
A, B, E, F, J, L, P, W
Also available with Coastal Series & Studio Collection Levers

ET Designation with Suffix (Used to order ET without device)
MD8600 & NB-MD8600 Series: 706-4, 710-4, 713-4, 715-4, 740-4, 743-4, 746-4, 773-4, & 774-4

Freewheeling Trim
The lever rotates when the door is locked preventing excessive force from being applied to the horizontal lever

Electrified ET Trim
Voltage must be specified for the following functions: 73 and 74.
Specify: 12VDC or 24VDC

SARGENT Function Numbers	ANSI Function Numbers	Description & Cylinder Info (1-3/4" Door)	ANSI Type 7 WD8600 Panic & Fire
06	09	Key unlocks Trim, Trim retracts latch/ Trim relocks when key is removed #41 Cylinder Supplied	WD8606 x ET_
10	01	No outside operation (No Cylinder)*	WD8610
10	02	No outside operation (No Cylinder)* ET Control is used as Pull Only	WD8610 x ET_
13	08	Key Outside Unlocks/locks Trim #41 Cylinder Supplied	WD8613 x ET_
15	14	Passage Only (No cylinder)	WD8615 x ET_
40	02	Freewheeling Trim - No outside operation (No Cylinder)* Dummy Trim	WD8640 x ET_
43	08	Freewheeling Trim - Key Outside Unlocks/locks Trim #41 Cylinder Supplied	WD8643 x ET_
46	09	Freewheeling Trim - Key unlocks Trim, Trim retracts latch/ Trim relocks when key is removed #41 Cylinder Supplied	WD8646 x ET_
73		Electrified ET Trim - Fail Safe Power Off, Unlocks Lever (No Cylinder)*	WD8673 x ET_
74		Electrified ET Trim - Fail Secure Power Off, Locks Lever (No Cylinder)*	WD8674 x ET_

Note: Exit devices are available in all standard finishes, except 14, 15, 26 & 26D. With these finishes, exit devices are supplied in 32 or 32D to match accordingly. 32 or 32D is automatically supplied when 26 or 26D is specified. For nickel finishes, specify 14/32 or 15/32D to receive nickel finished trims and stainless exit devices.
Note: AFF means Above Finished Floor, center line of rail Above Finished Floor
* Cylinder Override is available with a 106 Aux Control
Example Order: WD8673F 12V x ETMG x 106 x RHR x 32D x 36"w x 84"h

100 Series Auxiliary Control* & 862 Pull		SARGENT Function Numbers	ANSI Function Numbers	Description & Cylinder Info. (1-3/4" Door)	AD8600 Panic
100 Series Aux. Control	862 Pull	06	12	Key unlocks Turn; Turn retracts latch/Turn relocks when key is removed, #41 Cylinder Supplied	WD8610 x 106
		10	02	862 Pull Only (Optional Pulls: 863 & 864)	WD8610 x 862 Pull
		13	11	Key Outside Unlocks/locks Turn #41 Cylinder Supplied	WD8610 x 113

Note: When ordering WD8600/NB-WD8600 Series Exit Device x 100 Series Aux. Control, specify 10 Function for the exit.
Example: WD8610F x 106 x RHR x 32D x 42" x 90"

Options

WD8600
Mechanical Options:
12-
16-
19-
31-
36-
37-
43-
53-
54-
55-
56-
56-HK-
5LH
58-
59-
BC-59-
76-
85-
86-
87-
AL-
BT-
CPC-
LD-
NB-
PL-
* SG-
Cylinder Options:
10-
10-21-
10-63-
11-
11-21-
11-60-
11-63-
11-64-
11-70-7P-
11-72-7P-
11-73-7P-
11-65-73-7P-
21-
51-
52-
60-
63-
64-
70-
72-
73-
65-73-
65-73-7P-
73-7P-
81-
82-
F1-82-
83-
F1-83-
84-
BR-
LC-
SC-
SE-

* Only available with 15, 26D and 32D finishes

Available Finishes

Sargent Finishes	BHMA Finishes
03	605
04	606
09	611
10	612
10B	613
10BE	613E
10BL	613L
14	618
15	619
20D	624
26	625
26D	626
32	629
32D	630
BSP	—
WSP	

Copyright © 1998-2025, SARGENT Manufacturing Company. All rights reserved. Reproduction in whole or in part without the express written permission of SARGENT Manufacturing Company is prohibited. Patent pending and/or patent www.assaabloydss.com/patents.

8500 Narrow Design Rim Exit Device

SARGENT
ASSA ABLOY

8500 SERIES NARROW DESIGN RIM EXIT DEVICE

Features
- Designed for narrow stile applications (e.g., aluminum frame full glass doors)
- Single and double doors with mullion
- Single point rim latching device
- Quiet operation and solid security
- Devices are ANSI/BHMA A156.3 - Grade 1
- UL10C (Fire) and UL305 (Panic) listed

Specifications for 8500 Series Exit

Door Type	Wood or metal Doors
Door Thickness	1-3/4" (44mm) minimum thickness. For doors over 1-3/4" to 5" thick, specify thickness and order as 31- (see page 67 for function limitation)
Stile	2" (114mm) minimum stile (Less Trim)
Rail sizes as determined by door width	Rails are available in 4 sizes, use door width to determine size needed. Rails will be factory cut to size, if door width is supplied. • E Rail for 24" to 32" door widths • F Rail for 33" to 36" door widths • J Rail for 37" to 42" door widths • G Rail for 43" to 48" door widths
Strike	657 Strike, Supplied standard for panic devices 656 Strike, Supplied standard for panic devices 649 Strike, Supplied standard for fired rated devices Optional Strikes – 649, 658 Standard with 650A Mullion
Dogging Feature	Hex key dogging standard on non fired rated devices; specify 16- for cylinder dogging (#41 cylinder supplied)
Electric Options	AL- Alarm 53- LX Latchbolt Monitor 54- Outside Lever Monitoring 55- Request-to-Exit Signal - Rail Monitoring 56- Remote Latch Retraction 58- Electric Dogging 59- Electroguard – Self Contained Delayed Egress
Weather Resistant	WH- Weep Holes (Available only with Clear Coated Finishes. See Chart - Page 77)
Mounting Fasteners	Supplied standard with wood and machine screws Available with through-bolts and mortise (sex) nuts
Latch Bolt	Stainless steel, 3/4" (19mm) throw
Device Centerline from Finished Floor	41" (1041 mm) for Standard Applications
Center Case Dimensions	8-5/16" (211mm) x 1-1/16" (27mm)
Projection	Pushbar Neutral – 3" (76 mm) Pushbar Depressed – 2-1/8" (54 mm)
Fire Exit Hardware	See Chart – Page 6

604 Wear Plate Kit
- Designed for use with narrow stile aluminum doors
- Field cut to accommodate all door frame face sizes

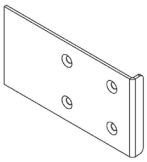

649 Standard Strike for 12-8500
- Surface applied
- Black nylon coated

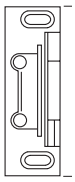

651 Mullion Stabilizer Kit
- Stabilizer block
- Furnished standard w/650A Mullion
- Order as a 651 Kit

656 Mullion Strike
- Surface applied
- Use with 980 mullions
- Black nylon coated

668 Shim Kits for 8500
- Two Chassis Shims and Two End Cap Shims
- Shims are 1/8" for a total height of 1/4"

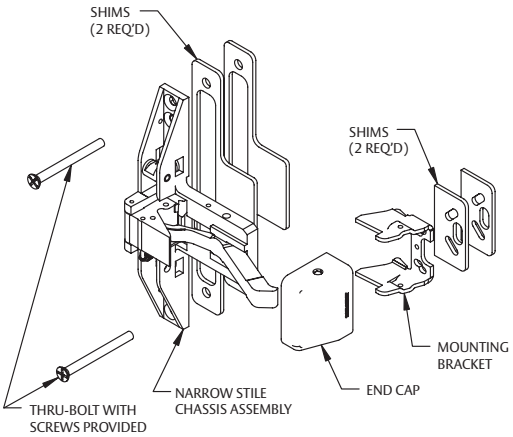

657 Standard Strike for 8500
- Surface applied or mortised
- For use on frames with blade stop or integral stop
- Black nylon coated

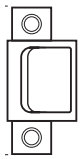

658 Strike alternative for 8500
- Packed standard with 650A mullion
- Can be ordered separately for surface application to frames
- Black nylon coated

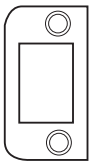

Copyright © 1998-2025, SARGENT Manufacturing Company. All rights reserved. Reproduction in whole or in part without the express written permission of SARGENT Manufacturing Company is prohibited. Patent pending and/or patent www.assaabloydss.com/patents.

8500 Narrow Design Rim Exit Device Functions & Trim

SARGENT
ASSA ABLOY

How to order:

Options	Series	Function	Rail Lgth	Trim	Hand	Outside Finish	Inside Finish	Door Width
F1-83-56	85	13	F	ETL	RHR	15	32D	36"

700 Series ET Trim
Exits with ET Trim, specify lever design after the ET designation (e.g., ETL)

Lever Designs for ET Controls
A, B, E, F, J, L, P, W
Also available with Coastal Series & Studio Collection Levers

ET Designation with Suffix (Used to order ET without device)
8500 Series: 704, 706-8, 710, 713-8, 715-8, 740, 743-8, 744, 746-8, 773-8 & 774-8

Freewheeling Trim
The lever rotates when the door is locked preventing excessive force from being applied to the horizontal lever

Electrified ET Trim
Voltage must be specified for the following functions: 73 and 74.
Specify: 12VDC or 24VDC

SARGENT Function Numbers	ANSI Function Numbers	Description & Cylinder Info. (1-3/4" Door)	ANSI Type 4 8500 Panic
04*	03	Night Latch Key Retracts Latch #34 Cylinder Supplied	8504 x ET_
06	09	Key unlocks Trim, Trim retracts latch/ Trim relocks when key is removed #41 Cylinder Supplied	8506 x ET_
10	01	No outside operation (No Cylinder)	8510
10	02	No outside operation (No Cylinder) ET Control is used as Pull Only	8510 x ET_
13	08	Key Outside Unlocks/locks Trim #41 Cylinder Supplied	8513 x ET_
15	14	Passage Only (No cylinder)	8515 x ET_
40	02	Freewheeling Trim - No outside operation (No Cylinder) Dummy Trim	8540 x ET_
43	08	Freewheeling Trim - Key Outside Unlocks/locks Trim #41 Cylinder Supplied	8543 x ET_
44	03	Freewheeling Trim - Key Retracts Latch #34 Cylinder Supplied	8544 x ET_
46	09	Freewheeling Trim - Key unlocks Trim, Trim retracts latch/ Trim relocks when key is removed #41 Cylinder Supplied	8546 x ET_
73		Electrified ET Trim - Fail Safe Power Off, Unlocks Lever (No Cylinder)**	8573 x ET_
74		Electrified ET Trim - Fail Secure Power Off, Locks Lever (No Cylinder)**	8574 x ET_

Note: Exit devices are available in all standard finishes, except 14, 15, 26 & 26D. With these finishes, exit devices are supplied in 32 or 32D to match accordingly. 32or 32D is automatically supplied when 26 or 26D is specified. For nickel finishes, specify 14/32 or 15/32D to receive nickel finished trims and stainless exit devices
* Consult factory when using with cylinders from other manufacturers
** Cylinder override is not available with 8500 Series Devices

Pull Trim Section	SARGENT Function Numbers	ANSI Function Numbers	Description & Cylinder Info. (1-3/4" Door)	Series 8500 Panic
862 Pull 	04	03	Night Latch Key Retracts Latch #34 Cylinder Supplied	8504 x 862 Pull only
	10	02	862 Pull Only (Optional Pulls: 863 & 864)	8510 x 862 Pull only

Options

8500
Mechanical Options: 12- 16- 19- 31- 36- 37- 43- 53- 54- 55- 56- 56-HK- 58- 59- 5CH- BC-59- 76- 85- 86- 87- AL- BT- CPC- GL- LD- PL- * SG- WH- **Cylinder Options:** 10- 10-21- 10-63- 11- 11-21- 11-60- 11-63- 11-64- 11-70-7P- 11-72-7P- 11-73-7P- 11-65-73-7P- 21- 51- 52- 60- 63- 64- 70- 72- 73- 65-73- 65-73-7P- 73-7P- 81- 82- F1-82- 83- F1-83- 84- BR- LC- SC- SE-

* Only available with 15, 26D and 32D finishes

Available Finishes

Sargent Finishes	BHMA Finishes
03	605
04	606
09	611
10	612
10B	613
10BE	613E
10BL	613L
14	618
15	619
20D	624
26	625
26D	626
32	629
32D	630
BSP	32DCP
WSP	

Copyright © 1998-2025, SARGENT Manufacturing Company. All rights reserved. Reproduction in whole or in part without the express written permission of SARGENT Manufacturing Company is prohibited. Patent pending and/or patent www.assaabloydss.com/patents.

AD8500 Narrow Design Rim Exit Device for Aluminum Doors

SARGENT
ASSA ABLOY

AD8500 SERIES NARROW DESIGN RIM EXIT DEVICE

AD8500 Features
- Designed for narrow stile applications (e.g., aluminum frame full glass doors)
- Single and double doors with mullion
- Single point rim latching device
- Quiet operation and solid security
- Devices are ANSI/BHMA A156.3 - Grade 1
- Available Windstorm-rated; order WS-

Specifications for AD8500 Series Exit

Door Type	Aluminum Doors
Door Thickness	1-3/4" (44mm) minimum thickness. For doors over 1-3/4" to 5" thick, specify thickness and order as 31- (see page 67 for function limitation)
Stile	2" (114mm) minimum stile (Less Trim)
Rail sizes as determined by door width	Rails are available in 4 sizes, use door width to determine size needed. Rails will be factory cut to size, if door width is supplied • E Rail for 24" to 32" door widths • F Rail for 33" to 36" door widths • J Rail for 37" to 42" door widths • G Rail for 43" to 48" door widths
Strike	657 Strike, Supplied standard for panic devices 656 Strike, Supplied standard for panic devices 649 Strike, Supplied standard for fired rated devices Optional Strikes – 649, 658 Standard with 650A Mullion
Dogging Feature	Hex key dogging standard; specify 16- for cylinder dogging (#41 cylinder supplied)
Electric Options	AL- Alarm 53- LX Latchbolt Monitor 54- Outside Lever Monitoring 55- Request-to-Exit Signal - Rail Monitoring 56- Remote Latch Retraction 58- Electric Dogging 59- Electroguard – Self Contained Delayed Egress
Mounting Fasteners	Supplied standard with wood and machine screws Available with through-bolts and mortise (sex) nuts
Latch Bolt	Stainless steel, 3/4" (19mm) throw
Device Centerline from Finished Floor	41" (1041 mm) for Standard Applications
Center Case Dimensions	8-5/16" (211mm) x 1-1/16" (27mm)
Projection	Pushbar Neutral – 3" (77mm) Pushbar Depressed – 2-1/8" (54mm)

657 Standard Strike for 8500
- Surface applied or mortised
- For use on frames with blade stop or integral stop
- Black nylon coated

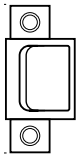

651 Mullion Stabilizer Kit
- Stabilizer block
- Furnished standard w/650A Mullion
- Order as a 651 Kit

656 Mullion Strike
- Surface applied
- Use with 980 mullions
- Black nylon coated

535 Kit for Windstorm Applications (WS-AD8500)
- Two Chassis Shims and Two End Cap Shims
- Shims are 1/8" for a total height of 1/4"
- 649 Strike Pack
- 651 Stabilizer Kit

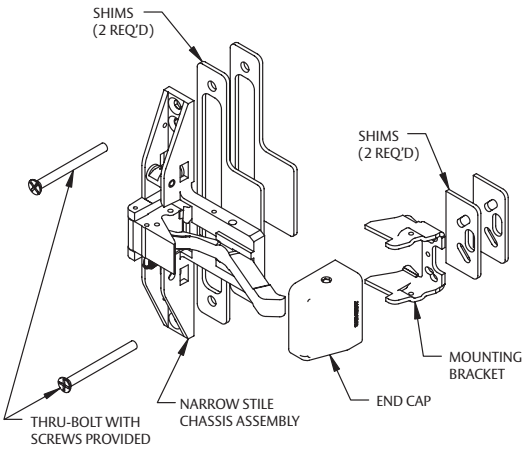

604 Wear Plate Kit
- Surface applied
- Accommodates all sizes of door frame face

Copyright © 1998-2025, SARGENT Manufacturing Company. All rights reserved. Reproduction in whole or in part without the express written permission of SARGENT Manufacturing Company is prohibited. Patent pending and/or patent www.assaabloydss.com/patents.

AD8500 Narrow Design Rim Exit Device Functions & Trim

SARGENT
ASSA ABLOY

How to order:

Options	Series	Function	Rail Lgth	Trim	Hand	Outside Finish	Inside Finish	Door Width
F1-83-56	AD85	13	F	ETL	RHR	15	32D	36"

700 Series ET Trim
Exits with ET Trim, specify lever design after the ET designation (e.g., ETL)

Lever Designs for ET Controls
A, B, E, F, J, L, P, W
Also available with Coastal Series & Studio Collection Levers

ET Designation with Suffix (Used to order ET without device)
AD8500 Series: 704, 706-8, 710, 713-8, 715-8, 740, 743-8, 744, 746-8, 773-8 & 774-8

Freewheeling Trim
The lever rotates when the door is locked preventing excessive force from being applied to the horizontal lever

Electrified ET Trim
Voltage must be specified for the following functions: 73 and 74.
Specify: 12VDC or 24VDC

SARGENT Function Numbers	ANSI Function Numbers	Description & Cylinder Info. (1-3/4" Door)	ANSI Type 4 AD8500 Panic
04*	03	Night Latch Key Retracts Latch #34 Cylinder Supplied	AD8504 x ET_
06	09	Key unlocks Trim, Trim retracts latch/ Trim relocks when key is removed #41 Cylinder Supplied	AD8506 x ET_
10	01	No outside operation (No Cylinder)	AD8510
10	02	No outside operation (No Cylinder) ET Control is used as Pull Only	AD8510 x ET_
13	08	Key Outside Unlocks/locks Trim #41 Cylinder Supplied	AD8513 x ET_
15	14	Passage Only (No cylinder)	AD8515 x ET_
40	02	Freewheeling Trim - No outside operation (No Cylinder) Dummy Trim	AD8540 x ET_
43	08	Freewheeling Trim - Key Outside Unlocks/locks Trim #41 Cylinder Supplied	AD8543 x ET_
44	03	Freewheeling Trim - Key Retracts Latch #34 Cylinder Supplied	AD8544 x ET_
46	09	Freewheeling Trim - Key unlocks Trim, Trim retracts latch/ Trim relocks when key is removed #41 Cylinder Supplied	AD8546 x ET_
73		Electrified ET Trim - Fail Safe Power Off, Unlocks Lever (No Cylinder)**	AD8573 x ET_
74		Electrified ET Trim - Fail Secure Power Off, Locks Lever (No Cylinder)**	AD8574 x ET_

Note: Exit devices are available in all standard finishes, except 14, 15, 26 & 26D. With these finishes, exit devices are supplied in 32 or 32D to match accordingly. 32 or 32D is automatically supplied when 26 or 26D is specified. For nickel finishes, specify 14/32 or 15/32D to receive nickel finished trims and stainless exit devices
* Consult factory when using with cylinders from other manufacturers
** Cylinder override is not available with AD8500 Series Devices

Pull Trim Section	SARGENT Function Numbers	ANSI Function Numbers	Description & Cylinder Info. (1-3/4" Door)	Series AD8500 Panic
862 Pull 	04	03	Night Latch Key Retracts Latch #34 Cylinder Supplied	AD8504 x 862 Pull only
	10	02	862 Pull Only (Optional Pulls: 863 & 864)	AD8510 x 862 Pull only

Options

AD8500
Mechanical Options: 12- 16- 19- 31- 36- 37- 43- 53- 54- 55- 56- 56-HK- 58- 59- 5CH- BC-59- 76- 85- 86- 87- AL- BT- CPC- GL- LD- PL- * SG- WS- **Cylinder Options:** 10- 10-21- 10-63- 11- 11-21- 11-60- 11-63- 11-64- 11-70-7P- 11-72-7P- 11-73-7P- 11-65-73-7P- 21- 51- 52- 60- 63- 64- 70- 72- 73- 65-73- 65-73-7P- 73-7P- 81- 82- F1-82- 83- F1-83- 84- BR- LC- SC- SE-

* Only available with 15, 26D and 32D finishes

Available Finishes

Sargent Finishes	BHMA Finishes
03	605
04	606
09	611
10	612
10B	613
10BE	613E
10BL	613L
14	618
15	619
20D	624
26	625
26D	626
32	629
32D	630
BSP	—
WSP	

Copyright © 1998-2025, SARGENT Manufacturing Company. All rights reserved. Reproduction in whole or in part without the express written permission of SARGENT Manufacturing Company is prohibited. Patent pending and/or patent www.assaabloydss.com/patents.

8300 Narrow Design Mortise Lock Exit Device

SARGENT
ASSA ABLOY

8300 SERIES NARROW DESIGN MORTISE LOCK EXIT DEVICE

Features
- Designed for standard width stiles with a narrow design look
- Through-bolted trim for quiet operation and security
- Single door applications
- Double door applications with Mortise Lock x Vertical Rod Device
- UL10C (Fire) and UL305 (Panic) listed
- Devices are ANSI/BHMA A156.3 - Grade 1

Specifications for 8300 Mortise Lock Exit

Door Type	Wood or metal doors
Door Thickness	1-3/4" (44mm) minimum thickness. For doors over 1-3/4" to 2-1/4" thick, specify thickness and order as 31-
Stile	4-1/2" (114mm) minimum stile width
Rail sizes as determined by door width	Rails are available in 4 sizes, use door width to determine size needed. Rails will be factory cut to size, if door width is supplied • E Rail for 24" to 32" door widths, No cutting required for 32" door • F Rail for 33" to 36" door widths, No cutting required for 36" door • J Rail for 37" to 42" door widths, No cutting required for 42" door • G Rail for 43" to 48" door widths, No cutting required for 48" door
Strike	C908 Standard Black Nylon Coated – ANSI Prep A115.1 Optional Strikes – 815 Open Back Strike or 908 Flat Lipped Strike with Black Nylon
Dogging Feature	Hex key dogging standard on non fired rated devices; specify 16- for cylinder dogging (#41 cylinder supplied)
Electric Options	AL- Alarm 53- LX Latchbolt Monitor 54- Outside Lever Monitoring 55- Request-to-Exit Signal - Rail Monitoring 56- Remote Latch Retraction 58- Electric Dogging 59- Electroguard – Self Contained Delayed Egress
Mounting Fasteners	Supplied standard with wood and machine screws
	Available with through-bolts and mortise(sex) nuts
Latch Bolt	Brass Nickel Plated, 3/4" (19mm) throw, anti-friction
Guarded/Deadlatch	Brass, sliding type
Device Centerline from Finished Floor	41" (1041 mm) for Standard Applications
Center Case Dimensions	8-5/16" (211mm) x 1-1/16" (27mm)
Projection	Pushbar Neutral – 3" (76mm)
	Pushbar Depressed – 2-1/8" (54mm)
Fire Exit Hardware	See Chart – Page 6

C908 Standard Strike
- Curved lip ANSI A-115.1
- Handed. 1-1/4" (32mm) lip standard
- Longer lips in increments of 1/4" (6mm) through 2-7/8" (73mm) available
- Black nylon coated

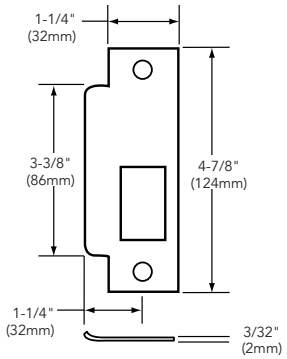

Single Door

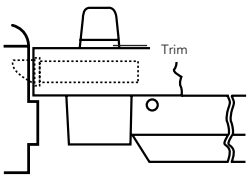

Pair of Doors

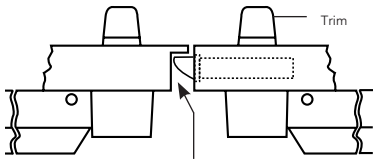

815 Open Back Strike
- ANSI A-115.14 Open Back
- Beveled 1/8" (3mm) in 2" (51mm)
- Specify hand of active door
- Black nylon coat
- "B" label

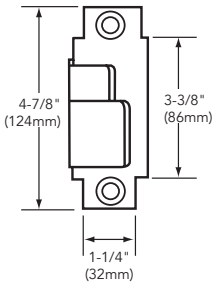

Copyright © 1998-2025, SARGENT Manufacturing Company. All rights reserved. Reproduction in whole or in part without the express written permission of SARGENT Manufacturing Company is prohibited. Patent pending and/or patent www.assaabloydss.com/patents.

SARGENT
ASSA ABLOY

8300 Narrow Design Mortise Lock Exit Device Functions & Trim

How to order:

Options	Series	Function	Rail Lgth	Trim	Hand	Outside Finish	Inside Finish	Door Width
11-	83	13	F	ETL	RHR	26D	32D	36"

700 Series ET Trim
Exits with ET Trim, specify lever design after the ET designation (e.g., ETL)

Lever Designs for ET Controls
A, B, E, F, J, L, P, W
Also available with Coastal Series & Studio Collection Levers

ET Designation with Suffix (Used to order ET without device)
8300 Series: 704, 710, 713, 715, 740, 743, 744, 773, 774, 775 & 776

Freewheeling Trim
The lever rotates when the door is locked preventing excessive force from being applied to the horizontal lever

Electrified ET Trim and Electrified Mortise Locks
Voltage must be specified for the following functions: 73, 74, 75 and 76.
Specify: 12VDC or 24VDC

SARGENT Function Numbers	ANSI Function Numbers	Description & Cylinder Info (1-3/4" Door)	ANSI Type 10 8300 Panic & Fire
04	03	Night Latch Key Retracts Latch #46 Cylinder Supplied	8304 x ET_
10	01	No outside operation (No Cylinder)	8310
10	02	No outside operation (No Cylinder) ET Control is used as Pull Only	8310 x ET_
13	08	Key Outside Unlocks/locks Trim #41 Cylinder Supplied	8313 x ET_
15	14	Passage Only (No cylinder)	8315 x ET_
40	02	Freewheeling Trim - No outside operation (No Cylinder) Dummy Trim	8340 x ET_
43	08	Freewheeling Trim - Key Outside Unlocks/locks Trim #41 Cylinder Supplied	8343 x ET_
44	03	Freewheeling Trim - Key Retracts Latch For 1-3/4" Door #46 Cylinder Supplied	8344 x ET_
75*		Electrified ET Trim - Fail Safe Power Off, Unlocks Lever, Key Retracts Latch For 1-3/4" Door #46 Cylinder Supplied	8375 x ET_
76**		Electrified ET Trim - Fail Secure Power Off, Locks Lever, Key Retracts Latch For 1-3/4" Door #46 Cylinder Supplied	8376 x ET_

Note: Exit devices are available in all standard finishes, except 14, 15, 26 & 26D. With these finishes, exit devices are supplied in 32 or 32D to match accordingly. 32 or 32D is automatically supplied when 26 or 26D is specified. For nickel finishes, specify 14/32 or 15/32D to receive nickel finished trims and stainless exit devices
* 75 Function without cylinder is available as a 73 Function
** 76 Function without cylinder is available as a 74 Function

Options

8300
Mechanical Options: 12- 16- 19- 23- *31 36- 37- 43- 53- 54- 55- 56- 56-HK- 58- 59- BC-59- 76- 85- 86- 87- AL- BT- LD- PL- *** SG- **Cylinder Options:** 10- 10-21- 10-63- 11- 11-21- 11-60- 11-63- 11-64- 11-70-7P- 11-72-7P- 11-73-7P- 11-65-73-7P- 21- 51- 52- 60- 63- 64- 70- 72- 73- 65-73- 65-73-7P- 73-7P- 81- 82- F1-82- 83- F1-83- 84- BR- LC- *SC- *SE-

* Options are not available with the following functions: 04, 44, 75 & 76
** For SC- & SE- options contact factory for availability
*** Only available with 15, 26D and 32D finishes

Available Finishes

Sargent Finishes	BHMA Finishes
03	605
04	606
09	611
10	612
10B	613
10BE	613E
10BL	613L
14	618
15	619
20D	624
26	625
26D	626
32	629
32D	630
BSP	—
WSP	

Pull & Thumbpiece Trim Section			Trim Designations • Use three letter designations (Ex "PTB") when ordering the Exit Device with trim • Use the six digit designation (Ex "866-MAL") when ordering trim without an Exit Device, always specify finish & hand					
SARGENT Function Numbers	ANSI Function Numbers	Description & Cylinder Info. (1-3/4" Door)						8300 Panic & Fire
04	03	Night Latch-Key Retracts Latch #41 Cylinder Supplied	814-FLL	814-FLW	814-MAL	814-PTB	814-STS	8304 x Trim Designation
10	02	No O/S Operation or Cylinder (Pull Only)	810-FLL	810-FLW	810-MAL	810-PTB	810-STS	8310 x Trim Designation
28	15	Passage Only (No cylinder)	828-FLL	828-FLW	828-MAL	828-PTB	828-STS	8328 x Trim Designation
63	05	Key Outside Unlocks/locks Thumbpiece #41 Cylinder Supplied	866-FLL	866-FLW	866-MAL	866-PTB	866-STS	8363 x Trim Designation

Note: Thumbpiece Trims used with Mortise Lock Exit Devices are handed
Note: Thumbpiece trims for 63 function devices are identified as 66 function when trim is ordered separately
Note: FLW trim is not available in 32(629) or 32D(630)
Note: Pulls and thumb piece trims are not available in 14, 15, 26 or 26D

Copyright © 1998-2025, SARGENT Manufacturing Company. All rights reserved. Reproduction in whole or in part without the express written permission of SARGENT Manufacturing Company is prohibited. Patent pending and/or patent www.assaabloydss.com/patents.

SARGENT
ASSA ABLOY

MD8400 and NB-MD8400 Narrow Stile Concealed Vertical Rod Exit Device for Metal Doors

MD8400 SERIES CONCEALED VERTICAL ROD EXIT DEVICE FOR METAL DOORS

Features
- Designed for narrow stile applications (e.g., full glass doors)
- Concealed rods for security and aesthetics
- UL10C (Fire) and UL305 (Panic) listed
- Specify NB- for less bottom rod
- NB- Devices allows free access for wheelchairs and carts. No bottom strike eliminates tripping potential
- All functions determined by outside trim
- Devices are ANSI/BHMA A156.3 - Grade 1

Specifications for MD8400 & NB-MD8400 Exit

Door Type	Hollow Metal Doors
Door Thickness	1-3/4" (44mm) minimum thickness. For doors over 1-3/4" to 2-1/4" thick, specify thickness and order as 31-
Cladding	Available for 1/4" on 1/2" panels. Specify 31- and panel thickness on order. Only available on 1-3/4" door thickness. Must be noted separately from door
Stile	1-3/4" (44mm) minimum stile width required. Stile must be hollow with inside dimension of at least 1-3/8" (35mm) square
Rail sizes as determined by door width	Rails are available in 4 sizes, use door width to determine size needed. Rails will be factory cut to size, if door width is supplied • E Rail for 24" to 32" door widths • F Rail for 33" to 36" door widths • J Rail for 37" to 42" door widths • G Rail for 43" to 48" door widths
Strike	650 Top Strike & 606 Bottom Strike (Panic and Fire Rated)
Dogging Feature	Hex key dogging standard on non fired rated devices; specify 16- for cylinder dogging (#41 cylinder supplied)
Electric Options	AL- Alarm 53- LX Latchbolt Monitor 54- Outside Lever Monitoring 55- Request-to-Exit Signal - Rail Monitoring 56- Remote Latch Retraction 58- Electric Dogging 59- Electroguard – Self Contained Delayed Egress
Mounting Fasteners	Supplied standard with machine screws
Top Bolt	Stainless steel
Device Centerline from Finished Floor	41" (1041mm) for Standard Applications 38" (965mm) for elementary schools
Door/Opening Height	**Must be specified** - 120" (3048mm) Max Door Opening
Center Case Dimensions	8-3/8" (213mm) x 2-5/8" (67mm)
Projection	Pushbar Neutral – 3" (76 mm) Pushbar Depressed – 2-1/8" (54mm)
Fire Exit Hardware	See Chart – Page 6

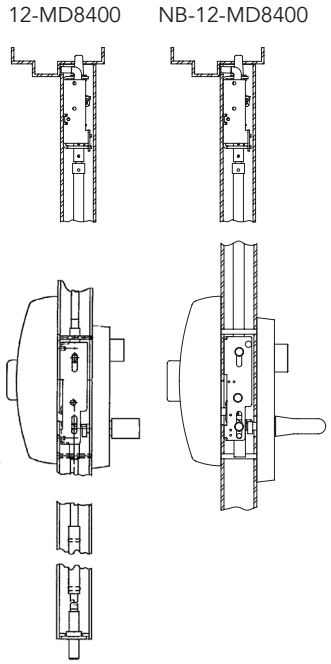

Note: MD8400 & 12-MD8400 can be used as NB- device by simply not installing the bottom rod/bolt
Note: 12-NB applications require thermal pin. Thermal pin supplied when ordered as a 12-NB device

100 Series Aux Control
- Available as an 06 or 13 function
- Supplied with a SARGENT #41 Mortise Cylinder
- Can be used with any SARGENT Mortise Key System

650 & 652 Strike Packs
- Stainless steel
- 650 & 652 Strike Packs contain the same strike
- 650 Strike Pack contains 1 strike for Top Bolt
- 652 Strike Pack contains 2 strikes for Top & Bottom

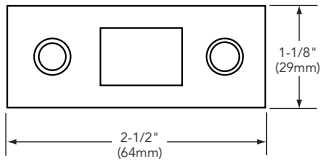

606 Bottom Strike (12-)
- Furnished with expansion shields
- Mortised into floor
- Stainless steel
- Bottom strike for 12-MD8400

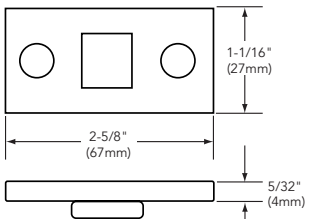

Copyright © 1998-2025, SARGENT Manufacturing Company. All rights reserved. Reproduction in whole or in part without the express written permission of SARGENT Manufacturing Company is prohibited. Patent pending and/or patent www.assaabloydss.com/patents.

SARGENT
ASSA ABLOY

MD8400 and NB-MD8400 Functions and Trims for Metal Doors

How to order:

Options	Series	Function	Rail Lgth	Trim	Hand	Outside Finish	Inside Finish	Door Width	Door Height	AFF
55-	NB-MD84	13	F	ETL	RHR	26D	32D	36"	84"	41"

700 Series ET Trim
Exits with ET Trim, specify lever design after the ET designation (e.g., ETL)

Lever Designs for ET Controls
A, B, E, F, J, L, P, W
Also available with Coastal Series & Studio Collection Levers

ET Designation with Suffix (Used to order ET without device)
MD8400 & NB-MD8400 Series: 706-4, 710-4, 713-4, 715-4, 740-4, 743-4, 746-4, 773-4, & 774-4

Freewheeling Trim
The lever rotates when the door is locked preventing excessive force from being applied to the horizontal lever

Electrified ET Trim
Voltage must be specified for the following functions: 73 and 74.
Specify: 12VDC or 24VDC

SARGENT Function Numbers	ANSI Function Numbers	Description & Cylinder Info (1-3/4" Door)	ANSI Type 6 8400 Panic & Fire
06	09	Key unlocks Trim, Trim retracts latch/ Trim relocks when key is removed #41 Cylinder Supplied	MD8406 x ET_
10	01	No outside operation (No Cylinder)*	MD8410
10	02	No outside operation (No Cylinder)* ET Control is used as Pull Only	MD8410 x ET_
13	08	Key Outside Unlocks/locks Trim #41 Cylinder Supplied	MD8413 x ET_
15	14	Passage Only (No cylinder)	MD8415 x ET_
40	02	Freewheeling Trim - No outside operation (No Cylinder)* Dummy Trim	MD8440 x ET_
43	08	Freewheeling Trim - Key Outside Unlocks/locks Trim #41 Cylinder Supplied	MD8443 x ET_
46	09	Freewheeling Trim - Key unlocks Trim, Trim retracts latch/ Trim relocks when key is removed #41 Cylinder Supplied	MD8446 x ET_
73		Electrified ET Trim - Fail Safe Power Off, Unlocks Lever (No Cylinder)* Specify: 12VDC or 24VDC	MD8473 x ET_
74		Electrified ET Trim - Fail Secure Power Off, Locks Lever (No Cylinder)* Specify: 12VDC or 24VDC	MD8474 x ET_

Note: Exit devices are available in all standard finishes, except 14, 15, 26 & 26D. With these finishes, exit devices are supplied in 32 or 32D to match accordingly. 32 or 32D is automatically supplied when 26 or 26D is specified. For nickel finishes, specify 14/32 or 15/32D to receive nickel finished trims and stainless exit devices
Note: AFF means Above Finished Floor, center line of rail Above Finished Floor
* Cylinder Override is available with a 106 Aux Control
Example Order: MD8473F 12V x ETMG x 106 x RHR x 32D x 36"w x 84"h

100 Series Auxiliary Control* & 862 Pull		SARGENT Function Numbers	ANSI Function Numbers	Description & Cylinder Info. (1-3/4" Door)	MD8400 Panic & Fire
100 Series Aux. Control	862 Pull	06	12	Key unlocks Turn; Turn retracts latch/Turn relocks when key is removed, #41 Cylinder Supplied	MD8410 x 106
		10	02	862 Pull Only (Optional Pulls: 863 & 864)	MD8410 x 862 Pull
		13	11	Key Outside Unlocks/locks Turn #41 Cylinder Supplied	MD8410 x 113

Note: When ordering MD8400 Series Exit Device x 100 Series Aux. Control, specify 10 Function for the exit.
Example: MD8410F x 106 x RHR x 32D x 42" x 90"

Options

MD8400
Mechanical Options:
12-
16-
19-
31-
36-
37-
43-
53-
54-
55-
56-
56-HK-
5LH
58-
59-
BC-59-
76-
85-
86-
87-
AL-
BT-
CPC-
LD-
NB-
PL-
* SG-
Cylinder Options:
10-
10-21-
10-63-
11-
11-21-
11-60-
11-63-
11-64-
11-70-7P-
11-72-7P-
11-73-7P-
11-65-73-7P-
21-
51-
52-
60-
63-
64-
70-
72-
73-
65-73-
65-73-7P-
73-7P-
81-
82-
F1-82-
83-
F1-83-
84-
BR-
LC-
SC-
SE-

* Only available with 15, 26D and 32D finishes

Available Finishes

Sargent Finishes	BHMA Finishes
03	605
04	606
09	611
10	612
10B	613
10BE	613E
10BL	613L
14	618
15	619
20D	624
26	625
26D	626
32	629
32D	630
BSP	—
WSP	

Copyright © 1998-2025, SARGENT Manufacturing Company. All rights reserved. Reproduction in whole or in part without the express written permission of SARGENT Manufacturing Company is prohibited. Patent pending and/or patent www.assaabloydss.com/patents.

AD8400 and NB-AD8400 Narrow Stile Concealed Vertical Rod Exit Device for Aluminum Doors

AD8400 SERIES CONCEALED VERTICAL ROD EXIT DEVICE FOR ALUMINUM DOORS

AD8400 & NB-AD8400 FEATURES

- Designed for narrow stile aluminum door applications (e.g., full glass doors)
- Concealed rods for security and aesthetics
- UL305 (Panic) listed
- Specify NB- for less bottom rod
- NB- device allows free access for wheelchairs and carts. No bottom strike eliminates tripping potential
- All functions determined by outside trim
- Devices are ANSI/BHMA A156.3 - Grade 1

Specifications for AD8400 & NB-AD8400 Exit

Door Type	Hollow or extruded aluminum doors
Door Thickness	1-3/4" (44mm) minimum thickness. For doors over 1-3/4" to 2-1/4" thick, specify thickness and order as 31-.
Cladding	Available for 1/4" on 1/2" panels. Specify 31- and panel thickness on order. Only available on 1-3/4" door thickness. Must be noted separately from door thickness on order string.
Stile	1-3/4" (44mm) minimum stile width required. Stile must be hollow with inside dimension of at least 1-3/8" (35mm) square
Rail sizes as determined by door width	Rails are available in 4 sizes, use door width to determine size needed. Rails will be factory cut to size, if door width is supplied • E Rail for 24" to 32" door widths • F Rail for 33" to 36" door widths • J Rail for 37" to 42" door widths • G Rail for 43" to 48" door widths
Strike	640 Strike for Top & Bottom
Dogging Feature	Hex key dogging standard on non fired rated devices; specify 16- for cylinder dogging (#41 cylinder supplied)
Electric Options	AL- Alarm 53- LX Latchbolt Monitor 54- Outside Lever Monitoring 55- Request-to-Exit Signal - Rail Monitoring 56- Remote Latch Retraction 58- Electric Dogging 59- Electroguard – Self Contained Delayed Egress
Mounting Fasteners	Supplied standard with machine screws
Top Bolt	Stainless steel
Device Centerline from Finished Floor	41" (1041mm) for Standard Applications
	38" (965mm) for elementary schools
Door/Opening Height	**Must be specified** - 120" (3048mm) Max Door Opening
Center Case Dimensions	8-3/8" (213mm) x 2-5/8" (67mm)
Projection	Pushbar Neutral – 3" (76mm) Pushbar Depressed – 2-1/8" (54mm)
Fire Exit Hardware	Not Available

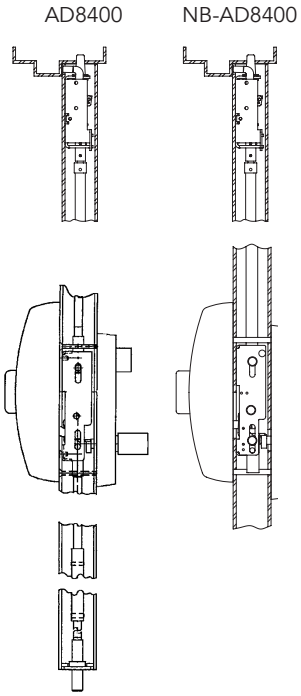

Note: AD8400 can be used as NB- Device by simply not installing the bottom rod/bolt

100 Series Aux Control

- Available as an 06 or 13 function
- Supplied with a SARGENT #41 Mortise Cylinder
- Can be used with any SARGENT Mortise Key System

639/640 Strike Kits

- Steel with Black Nylon Coating
- Machine Screws Supplied
- 640 Kit contains 2 strikes (Top & Bottom)
- 639 Kit contains 1 strike (Top Only)

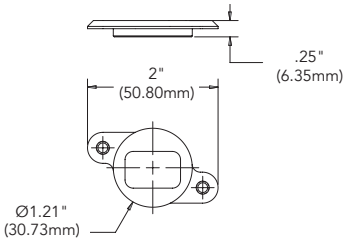

Copyright © 1998-2025, SARGENT Manufacturing Company. All rights reserved. Reproduction in whole or in part without the express written permission of SARGENT Manufacturing Company is prohibited. Patent pending and/or patent www.assaabloydss.com/patents.

AD8400 and NB-AD8400 Functions and Trims for Aluminum Doors

SARGENT
ASSA ABLOY

How to order:

Options	Series	Function	Rail Lgth	Trim	Hand	Outside Finish	Inside Finish	Door Width	Door Height	AFF
55-	AD84	13	F	ETL	RHR	26D	32D	36"	84"	41"

700 Series ET Trim
Exits with ET Trim, specify lever design after the ET designation (e.g., ETL)

Lever Designs for ET Controls
A, B, E, F, J, L, P, W
Also available with Coastal Series & Studio Collection Levers

ET Designation with Suffix (Used to order ET without device)
8400 & NB-8400 Series: 706-4, 710-4, 713-4, 715-4, 740-4, 743-4, 746-4, 773-4, & 774-4

Freewheeling Trim
The lever rotates when the door is locked preventing excessive force from being applied to the horizontal lever

Electrified ET Trim
Voltage must be specified for the following functions: 73 and 74.
Specify: 12VDC or 24VDC

SARGENT Function Numbers	ANSI Function Numbers	Description & Cylinder Info (1-3/4" Door)	ANSI Type 6 AD8400 Panic & Fire
06	09	Key unlocks Trim, Trim retracts latch/ Trim relocks when key is removed #41 Cylinder Supplied	AD8406 x ET_
10	01	No outside operation (No Cylinder)*	AD8410
10	02	No outside operation (No Cylinder)* ET Control is used as Pull Only	AD8410 x ET_
13	08	Key Outside Unlocks/locks Trim #41 Cylinder Supplied	AD8413 x ET_
15	14	Passage Only (No cylinder)	AD8415 x ET_
40	02	Freewheeling Trim - No outside operation (No Cylinder)* Dummy Trim	AD8440 x ET_
43	08	Freewheeling Trim - Key Outside Unlocks/locks Trim #41 Cylinder Supplied	AD8443 x ET_
46	09	Freewheeling Trim - Key unlocks Trim, Trim retracts latch/ Trim relocks when key is removed #41 Cylinder Supplied	AD8446 x ET_
73		Electrified ET Trim - Fail Safe Power Off, Unlocks Lever (No Cylinder)* Specify: 12VDC or 24VDC	AD8473 x ET_
74		Electrified ET Trim - Fail Secure Power Off, Locks Lever (No Cylinder)* Specify: 12VDC or 24VDC	AD8474 x ET_

Note: Exit devices are available in all standard finishes, except 14, 15, 26 & 26D. With these finishes, exit devices are supplied in 32 or 32D to match accordingly. 32 or 32D is automatically supplied when 26 or 26D is specified. For nickel finishes, specify 14/32 or 15/32D to receive nickel finished trims and stainless exit devices.
Note: AFF means Above Finished Floor, center line of rail Above Finished Floor
* Cylinder Override is available with a 106 Aux Control
Example Order: AD8473F 12V x ETMG x 106 x RHR x 32D x 36"w x 84"h

100 Series Auxiliary Control* & 862 Pull		SARGENT Function Numbers	ANSI Function Numbers	Description & Cylinder Info. (1-3/4" Door)	MD8400 Panic & Fire
100 Series Aux. Control	862 Pull	06	12	Key unlocks Turn, Turn retracts latch/ Turn relocks when key is removed #41 Cylinder Supplied	AD8410 x 106
		10	02	862 Pull Only (Optional Pulls: 863 & 864)	AD8410 x 862 Pull
		13	11	Key Outside Unlocks/locks Turn #41 Cylinder Supplied	AD8410 x 113

Note: When ordering 8400 Series Exit Device x 100 Series Aux. Control, specify 10 Function for the exit.
Example: AD8410F x 106 x RHR x 32D x 42" x 90"

Options

AD8400
Mechanical Options: 16- 19- 31- 36- 37- 43- 53- 54- 55- 56- 56-HK- 5LH 58- 59- BC-59- 76- 85- 86- 87- AL- BT- CPC- LD- NB- PL- * SG- **Cylinder Options:** 10- 10-21- 10-63- 11- 11-21- 11-60- 11-63- 11-64- 11-70-7P- 11-72-7P- 11-73-7P- 11-65-73-7P- 21- 51- 52- 60- 63- 64- 70- 72- 73- 65-73- 65-73-7P- 73-7P- 81- 82- F1-82- 83- F1-83- 84- BR- LC- SC- SE-

* Only available with 15, 26D and 32D finishes

Available Finishes

Sargent Finishes	BHMA Finishes
03	605
04	606
09	611
10	612
10B	613
10BE	613E
10BL	613L
14	618
15	619
20D	624
26	625
26D	626
32	629
32D	630
BSP	—
WSP	

Copyright © 1998-2025, SARGENT Manufacturing Company. All rights reserved. Reproduction in whole or in part without the express written permission of SARGENT Manufacturing Company is prohibited. Patent pending and/or patent www.assaabloydss.com/patents.

LP8600 & LR8600 Low Profile Center & Top Latch Concealed Vertical Rods for Pair of Doors & Double Egress

SARGENT
ASSA ABLOY

LP8600 & LR8600 SERIES

Features

- The security of a stainless steel center bolt, two concealed top bolts and a low profile device for pairs of doors without bottom rod issues
- Devices are ANSI/BHMA A156.3 - Grade 1
- UL10C (Fire) and UL305 (Panic) listed
- 1-1/2" total projection from face of door
- Center and top latching
- No visible active chassis
- Center latchbolt adjustable for up to 3/8" (9mm) door gap
- Both doors are active. Either door can be opened or closed without affecting the other door. Open back strikes are not required
- Top case latchbolt projection adjustable through top case
- Tripping potential removed - no bottom strike
- All functions determined by outside trim (ET Trim only)
- Concealed rods for security and aesthetics

LP8600 Shown

Specifications

Door Type	Factory prepped metal doors for LP & LR devices
Door Thickness	1-3/4" (44mm) doors only with 2-3/4" (70mm) backset
Stile	4-1/2" (114mm) minimum stile
Rail sizes as determined by door width	Rails are available in 3 sizes, use door width to determine size needed. • L Rail for 36" door width no cutting required • M Rail for 42" to 44" door width no cutting required • N Rail - 46" to 48" door width no cutting required
Strike	650 Top Strike (Panic and Fire Rated)
Dogging Feature	Hex key dogging standard on non fired rated devices; specify 16- for cylinder dogging (#41 cylinder supplied)
Electric Options	AL- Alarm 54- Outside Lever Monitoring 55- Request-to-Exit Signal - Rail Monitoring 56- Remote Latch Retraction 58- Electric Dogging
Mounting Fasteners	Supplied standard with machine screws
Top & Center Bolts	Stainless steel
Device Centerline from Finished Floor	41" (1041mm) for Standard Applications
Door/Opening Height	**Must be specified** - 120" (3048mm) Max Door Opening
Center Case Dimensions	8-3/8" (213mm) x 2-5/8" (67mm)
Projection	Pushbar Neutral – 1-1/2" (38mm)
	Pushbar Depressed – 5/8" (15mm)
Fire Exit Hardware	See Chart – Page 6

How it works: The mortise lock of the LP device has a stainless steel bolt which projects into the mortise lock of the LR device at the center of the door in addition to top bolts in each door.

LP8610 SIDE VIEW

PAIR OF DOORS

Notes:

1. Available for 1-3/4" (44mm) thick doors only. No glass bead shim kits or inside panel condition permitted.
2. LS/LP/LR8600 are available in the following door sizes only: 36", 42", 44", 46" or 48" (914mm, 1067mm, 1118mm, 1168mm or 1219mm)

Note: The following hollow metal door manufacturers are equipped to reinforce and prepare their steel doors for the LS/LP/LR8600 Series Low Profile exit devices: CECO, CURRIES and FLEMING. Please check with any other hollow metal door manufacturers regarding their ability to properly reinforce and prepare their doors for these exit devices

DOUBLE EGRESS APPLICATION

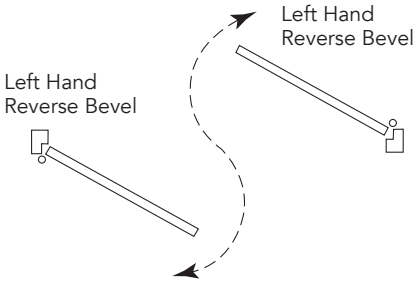

Copyright © 1998-2025, SARGENT Manufacturing Company. All rights reserved. Reproduction in whole or in part without the express written permission of SARGENT Manufacturing Company is prohibited. Patent pending and/or patent www.assaabloydss.com/patents.

LP & LR8600 Functions & Trims for Pairs of Doors

SARGENT
ASSA ABLOY

How to order:

Options	Series	Function	Rail Lgth	Trim	Hand	Outside Finish	Inside Finish	Door Width	Door Height	AFF
55-	LP86	13	F	ETL	RHR	14	32D	36"	84"	41"

700 Series ET Trim
Exits with ET Trim, specify lever design after the ET designation (e.g., ETL)

Lever Designs for ET Controls
A, B, E, F, J, L, P, W
Also available with Coastal Series & Studio Collection Levers

ET Designation with Suffix (Used to order ET without device)
LP8600 & LR8600 Series: 706-6, 710-6, 713-6, 715-6, 740-6, 743-6, 746-6, 773-6 & 774-6

Freewheeling Trim
The lever rotates when the door is locked preventing excessive force from being applied to the horizontal lever

Electrified ET Trim
Voltage must be specified for the following functions: 73 and 74.
Specify: 12VDC or 24VDC

Note: LP & LR Exit devices should be ordered in pairs, for correct operation; one device engages the other. For single door applications, order LS Device

SARGENT Function Numbers	ANSI Function Numbers	Description & Cylinder Info (1-3/4" Door)	ANSI Type 2	
			LP8600 Panic & Fire	LR8600 Panic & Fire
06	09	Key unlocks Trim, Trim retracts latch/ Trim relocks when key is removed #41 Cylinder Supplied	LP8606 x ET_	LR8606 x ET_
10	01	No outside operation (No Cylinder)	LP8610	LR8610
10	02	No outside operation (No Cylinder) ET Control is used as Pull Only	LP8610 x ET_	LR8610 x ET_
13	08	Key Outside Unlocks/locks Trim #41 Cylinder Supplied	LP8613 x ET_	LR8613 x ET_
15	14	Passage Only (No cylinder)	LP8615 x ET_	LR8615 x ET_
40	02	Freewheeling Trim - No outside operation (No Cylinder) Dummy Trim	LP8640 x ET_	LR8640 x ET_
43	08	Freewheeling Trim - Key Outside Unlocks/locks Trim #41 Cylinder Supplied	LP8643 x ET_	LR8643 x ET_
46	09	Freewheeling Trim - Key unlocks Trim, Trim retracts latch/ Trim relocks when key is removed #41 Cylinder Supplied	LP8646 x ET_	LR8646 x ET_
73		Electrified ET Trim - Fail Safe Power Off, Unlocks Lever (No Cylinder)*	LP8673 x ET_	LR8673 x ET_
74		Electrified ET Trim - Fail Secure Power Off, Locks Lever (No Cylinder)*	LP8674 x ET_	LR8674 x ET_

Note: Exit devices are available in all standard finishes, except 14, 15, 26 & 26D. With these finishes, exit devices are supplied in 32 or 32D to match accordingly. 32 or 32D is automatically supplied when 26 or 26D is specified. For nickel finishes, specify 14/32 or 15/32D to receive nickel finished trims and stainless exit devices
Note: AFF means Above Finished Floor, center line of rail Above Finished Floor
* Cylinder override is not available with LP & LR 8600 Series Devices

Options

LP & LR8600
Mechanical Options:
12-
16-
19-
36-
37-
54-
55-
56-
56-HK-
58-
76-
85-
86-
87-
AL-
BT-
CPC-
LD-
PL-
* SG-
Cylinder Options:
10-
10-21-
10-63-
11-
11-21-
11-60-
11-63-
11-64-
11-70-7P-
11-72-7P-
11-73-7P-
11-65-73-7P-
21-
51-
52-
60-
63-
64-
70-
72-
73-
65-73-
65-73-7P-
73-7P-
81-
82-
F1-82-
83-
F1-83-
84-
BR-
LC-
SC-
SE-

* Only available with 15, 26D and 32D finishes

68-1183 Double Lipped LR Mortise Front
- Standard for LR8600
- Stainless steel only

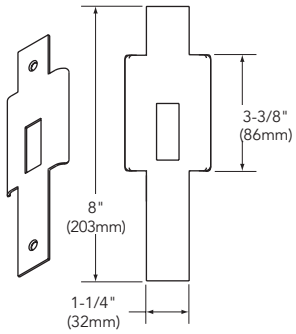

650 Top Strike
- For application in metal frames
- Stainless steel

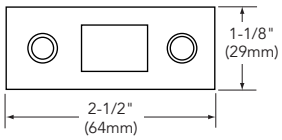

Available Finishes

Sargent Finishes	BHMA Finishes
03	605
04	606
09	611
10	612
10B	613
10BE	613E
10BL	613L
14	618
15	619
20D	624
26	625
26D	626
32	629
32D	630
BSP	—
WSP	

Copyright © 1998-2025, SARGENT Manufacturing Company. All rights reserved. Reproduction in whole or in part without the express written permission of SARGENT Manufacturing Company is prohibited. Patent pending and/or patent www.assaabloydss.com/patents.

LS8600 Low Profile Center & Top Latch Concealed Vertical Rod for Single Door Applications

LS8600 SERIES

Features

- The security of a stainless steel center bolt, concealed top bolt and a low profile device for single doors without bottom rod issues
- Devices are ANSI/BHMA A156.3 - Grade 1
- UL10C (Fire) and UL305 (Panic) listed
- 1-1/2" total projection from face of door
- Center and top latching
- No visible active chassis
- Center latchbolt adjustable for up to 3/8" (9mm) door gap
- Top case latchbolt projection adjustable through top case
- Tripping potential removed - no bottom strike
- All functions determined by outside trim (ET Trim only)
- Concealed rods for security and aesthetics

Specifications for LS8600 Series Exit

Door Type	Factory prepped metal doors for LP & LR devices
Door Thickness	1-3/4" (44mm) doors only with 2-3/4" (70mm) backset
Stile	4-1/2" (114mm) minimum stile width
Rail sizes as determined by door width	Rails are available in 3 sizes, use door width to determine size needed. • L Rail for 36" door width no cutting required • M Rail for 42" to 44" door width no cutting required • N Rail - 46" to 48" door width no cutting required
Strike	650 Top Strike & C7710 Mortise Strike (Panic and Fire Rated)
Dogging Feature	Hex key dogging standard on non fired rated devices; specify 16- for cylinder dogging (#41 cylinder supplied)
Electric Options	AL- Alarm 54- Outside Lever Monitoring 55- Request-to-Exit Signal - Rail Monitoring 56- Remote Latch Retraction 58- Electric Dogging
Mounting Fasteners	Supplied standard with machine screws
Top & Center Bolts	Stainless steel
Device Centerline from Finished Floor	41" (1041 mm) for Standard Applications Door/Opening Height **Must be specified** - 120" (3048mm) Max Door Opening
Center Case Dimensions	8-3/8" (213mm) x 2-5/8" (67mm)
Projection	Pushbar Neutral – 1-1/2" (38mm) Pushbar Depressed – 5/8" (15mm)
Fire Exit Hardware	See Chart – Page 6

LS8610 SIDE VIEW

Notes:

1. Available for 1-3/4" (44mm) thick doors only. No glass bead shim kits or inside panel condition permitted.
2. LS/LP/LR8600 are available in the following door sizes only: 36", 42", 44", 46" or 48" (914mm, 1067mm, 1118mm, 1168mm or 1219mm)

How it works: The mortise lock of the LS device has a stainless steel bolt which projects into the door frame at the center of the door with the additional security of a concealed top bolt.

Note: The following hollow metal door manufacturers are equipped to reinforce and prepare their steel doors for the LS/LP/LR8600 Series Low Profile exit devices: CECO, CURRIES and FLEMING. Please check with any other hollow metal door manufacturers regarding their ability to properly reinforce and prepare their doors for these exit devices.

Copyright © 1998-2025, SARGENT Manufacturing Company. All rights reserved. Reproduction in whole or in part without the express written permission of SARGENT Manufacturing Company is prohibited. Patent pending and/or patent www.assaabloydss.com/patents.

LS8600 Functions and Trims

SARGENT
ASSA ABLOY

How to order:

Options	Series	Function	Rail Lgth	Trim	Hand	Outside Finish	Inside Finish	Door Width	Door Height	AFF
55-	LP86	13	F	ETL	RHR	26D	32D	36"	84"	41"

700 Series ET Trim
Exits with ET Trim, specify lever design after the ET designation (e.g., ETL)

Lever Designs for ET Controls
A, B, E, F, J, L, P, W
Also available with Coastal Series & Studio Collection Levers

ET Designation with Suffix (Used to order ET without device)
LS8600 Series: 706-6, 710-6, 713-6, 715-6, 740-6, 743-6, 746-6, 773-6 & 774-6

Freewheeling Trim
The lever rotates when the door is locked preventing excessive force from being applied to the horizontal lever

Electrified ET Trim
Voltage must be specified for the following functions: 73 and 74.
Specify: 12VDC or 24VDC

SARGENT Function Numbers	ANSI Function Numbers	Description & Cylinder Info (1-3/4" Door)	ANSI Type 12 LS8600 Panic & Fire
06	09	Key unlocks Trim, Trim retracts latch/ Trim relocks when key is removed #41 Cylinder Required & Supplied	LS8606 x ET_
10	01	No outside operation (No Cylinder)	LS8610
10	02	No outside operation (No Cylinder) ET Control is used as Pull Only	LS8610 x ET_
13	08	Key Outside Unlocks/locks Trim #41 Cylinder Required & Supplied	LS8613 x ET_
15	14	Passage Only (No cylinder)	LS8615 x ET_
40	02	Freewheeling Trim - No outside operation (No Cylinder) Dummy Trim	LS8640 x ET_
43	08	Freewheeling Trim - Key Outside Unlocks/locks Trim #41 Cylinder Supplied	LS8643 x ET_
46	09	Freewheeling Trim - Key unlocks Trim, Trim retracts latch/ Trim relocks when key is removed #41 Cylinder Required & Supplied	LS8646 x ET_
73		Electrified ET Trim - Fail Safe Power Off, Unlocks Lever (No Cylinder)*	LS8673 x ET_
74		Electrified ET Trim - Fail Secure Power Off, Locks Lever (No Cylinder)*	LS8674 x ET_

Note: Exit devices are available in all standard finishes, except 14, 15, 26 & 26D. With these finishes, exit devices are supplied in 32 or 32D to match accordingly. 32 or 32D is automatically supplied when 26 or 26D is specified. For nickel finishes, specify 14/32 or 15/32D to receive nickel finished trims and stainless exit devices
Note: AFF means Above Finished Floor, center line of rail Above Finished Floor
* Cylinder override is not available with LP 8700 Series Devices

Options

LS8600
Mechanical Options:
12-
16-
19-
36-
37-
54-
55-
56-
56-HK-
58-
76-
85-
86-
87-
AL-
BT-
CPC-
LD-
PL-
* SG-
Cylinder Options:
10-
10-21-
10-63-
11-
11-21-
11-60-
11-63-
11-64-
11-70-7P-
11-72-7P-
11-73-7P-
11-65-73-7P-
21-
51-
52-
60-
63-
64-
70-
72-
73-
65-73-
65-73-7P-
73-7P-
81-
82-
F1-82-
83-
F1-83-
84-
BR-
LC-
SC-
SE-

* Only available with 15, 26D and 32D finishes

C7710 Mortise Centercase Strike
- Standard for LS8600
- Handed
- Stainless steel only

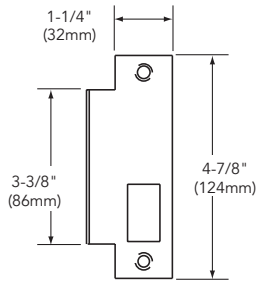

650 Top Strike
- For application in metal frames
- Stainless steel
- Top strike for Panic & Fire Rated

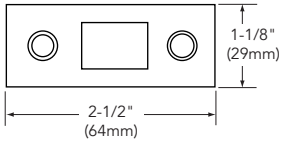

Available Finishes

Sargent Finishes	BHMA Finishes
03	605
04	606
09	611
10	612
10B	613
10BE	613E
10BL	613L
14	618
15	619
20D	624
26	625
26D	626
32	629
32D	630
BSP	—
WSP	

Copyright © 1998-2025, SARGENT Manufacturing Company. All rights reserved. Reproduction in whole or in part without the express written permission of SARGENT Manufacturing Company is prohibited. Patent pending and/or patent www.assaabloydss.com/patents.

SARGENT
ASSA ABLOY

MD8600 (Hurricane-Resistant) Concealed Vertical Rod Exit Device for Metal Doors

MD8600 SERIES CONCEALED VERTICAL ROD EXIT DEVICE FOR METAL DOORS

Features
- Designed for standard width stile applications on hollow metal doors
- Concealed rods for security and aesthetics
- Single and double door applications
- Devices are ANSI/BHMA A156.3 - Grade 1
- UL10C (Fire) and UL305 (Panic) listed

Specifications for MD8600 Series Exit

Door Type	Metal Doors
Door Thickness	1-3/4" (44mm) minimum thickness. For doors over 1-3/4" to 2-1/4" thick, specify thickness and order as 31-
Cladding	Available for 1/4" on 1/2" panels. Specify 31- and panel thickness on order. Only available on 1-3/4" door thickness. Must be noted separately from door thickness on order string.
Stile	4-1/2" (114mm) minimum stile width
Rail sizes as determined by door width	Rails are available in 4 sizes, use door width to determine size needed. Rails will be factory cut to size, if door width is supplied • E Rail for 24" to 32" door widths, No cutting required for 32" door • F Rail for 33" to 36" door widths, No cutting required for 36" door • J Rail for 37" to 42" door widths, No cutting required for 42" door • G Rail for 43" to 48" door widths, No cutting required for 48" door
Strike	650 Top Strike & 606 Bottom Strike (Panic and Fire Rated)
Dogging Feature	Hex key dogging standard on non fired rated devices; specify 16- for cylinder dogging (#41 cylinder supplied)
Electric Options	AL- Alarm 53- LX Latchbolt Monitor 54- Outside Lever Monitoring 55- Request-to-Exit Signal - Rail Monitoring 56- Remote Latch Retraction 58- Electric Dogging 59- Electroguard – Self Contained Delayed Egress
Mounting Fasteners	Supplied standard with machine screws
Top Bolt	Stainless steel
Device Centerline from Finished Floor	41" (1041mm) for Standard Applications
	38" (965mm) for elementary schools
Door/Opening Height	**Must be specified** - 120" (3048mm) Max Door Opening
	96" max door height for HC and WS options
Center Case Dimensions	8-3/8" (213mm) x 2-5/8" (67mm)
Projection	Pushbar Neutral – 3" (76mm) Pushbar Depressed – 2-1/8" (54mm)
Fire Exit Hardware	See Chart – Page 6

Notes:
- MD8600 & 12-MD8600 can be used as NB- Device by simply not installing the bottom rod/bolt.
- 12-NB Applications require thermal pin. Thermal Pin supplied when ordered as a 12-NB Device.
- Must include "HC" option in the order string to specify Hurricane Resistant product.

100 Series Aux Control
- Available as an 06 or 13 function
- Supplied with a SARGENT #41 Mortise Cylinder
- Can be used with any SARGENT Mortise Key System

650 Top Strike
- For application in hollow metal frames
- Stainless steel nylon coated

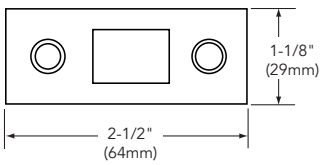

606 Bottom Strike
- Furnished with expansion shields
- Mortised into floor
- Stainless steel

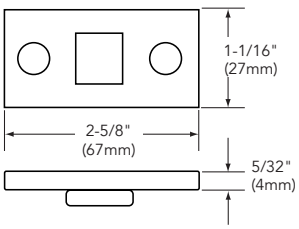

Copyright © 1998-2025, SARGENT Manufacturing Company. All rights reserved. Reproduction in whole or in part without the express written permission of SARGENT Manufacturing Company is prohibited. Patent pending and/or patent www.assaabloydss.com/patents.

MD8600 Functions and Trims for Metal Doors

SARGENT
ASSA ABLOY

How to order:

Options	Series	Function	Rail Lgth	Trim	Hand	Outside Finish	Inside Finish	Door Width	Door Height	AFF
59-	MD86	13	F	ETL	RHR	03	03	36"	84"	41"

700 Series ET Trim
Exits with ET Trim, specify lever design after the ET designation (e.g., ETL)

Lever Designs for ET Controls
A, B, E, F, J, L, P, W
Also available with Coastal Series & Studio Collection Levers

ET Designation with Suffix (Used to order ET without device)
MD8600 Series:
706-4, 710-4, 713-4, 715-4, 740-4, 743-4, 746-4, 773-4, & 774-4

Freewheeling Trim
The lever rotates when the door is locked preventing excessive force from being applied to the horizontal lever

Electrified ET Trim
Voltage must be specified for the following functions: 73 and 74.
Specify: 12VDC or 24VDC

SARGENT Function Numbers	ANSI Function Numbers	Description & Cylinder Info (1-3/4" Door)	ANSI Type 8 MD8600 Panic & Fire
06	09	Key unlocks Trim, Trim retracts latch/ Trim relocks when key is removed #41 Cylinder Supplied	MD8606 x ET_
10	01	No outside operation (No Cylinder)*	MD8610
10	02	No outside operation (No Cylinder)* ET Control is used as Pull Only	MD8610 x ET_
13	08	Key Outside Unlocks/locks Trim #41 Cylinder Supplied	MD8613 x ET_
15	14	Passage Only (No cylinder)	MD8615 x ET_
40	02	Freewheeling Trim - No outside Operation (No Cylinder)* Dummy Trim	MD8640 x ET_
43	08	Freewheeling Trim - Key Outside Unlocks/locks Trim #41 Cylinder Supplied	MD8643 x ET_
46	09	Freewheeling Trim - Key unlocks Trim, Trim retracts latch/ Trim relocks when key is removed #41 Cylinder Supplied	MD8646 x ET_
73		Electrified ET Trim - Fail Safe Power Off, Unlocks Lever (No Cylinder)*	MD8673 x ET_
74		Electrified ET Trim - Fail Secure Power Off, Locks Lever (No Cylinder)*	MD8674 x ET_

Note: Exit devices are available in all standard finishes, except 14, 15, 26 & 26D. With these finishes, exit devices are supplied in 32 or 32D to match accordingly. 32 or 32D is automatically supplied when 26 or 26D is specified. For nickel finishes, specify 14/32 or 15/32D to receive nickel finished trims and stainless exit devices
Note: AFF means Above Finished Floor, center line of rail Above Finished Floor
* Cylinder Override is available with a 106 Aux Control
Example Order: MD8673F 12V x ETMG x 106 x RHR x 32D x 36"w x 84"h

100 Series Auxiliary Control* & 862 Pull		SARGENT Function Numbers	ANSI Function Numbers	Description & Cylinder Info. (1-3/4" Door)	MD8600 Panic & Fire
100 Series Aux. Control	862 Pull	06	12	Key unlocks Turn, Turn retracts latch/ Turn relocks when key is removed #41 Cylinder Supplied	MD8610 x 106
		10	02	862 Pull Only (Optional Pulls: 863 & 864)	MD8610 x 862 Pull
		13	11	Key Outside Unlocks/locks Turn #41 Cylinder Supplied	MD8610 x 113

Note: When ordering MD8600 Series Exit Device x 100 Series Aux. Control, specify 10 Function for the exit.
Example: MD8610F x 106 x RHR x 32D x 42" x 90"

Options

MD8600
Mechanical Options:
12-
16-
19-
31-
36-
37-
43-
53-
54-
55-
56-
56-HK-
5LH
58-
59-
BC-59-
76-
85-
86-
87-
AL-
BT-
CPC-
HC-
LD-
PL-
* SG-
WS-
Cylinder Options:
10-
10-21-
10-63-
11-
11-21-
11-60-
11-63-
11-64-
11-70-7P-
11-72-7P-
11-73-7P-
11-65-73-7P-
21-
51-
52-
60-
63-
64-
70-
72-
73-
65-73-
65-73-7P-
73-7P-
81-
82-
F1-82-
83-
F1-83-
84-
BR-
LC-
SC-
SE-

* Only available with 15, 26D and 32D finishes

Available Finishes

Sargent Finishes	BHMA Finishes
03	605
04	606
09	611
10	612
10B	613
10BE	613E
10BL	613L
14	618
15	619
20D	624
26	625
26D	626
32	629
32D	630
BSP	—
WSP	

Copyright © 1998-2025, SARGENT Manufacturing Company. All rights reserved. Reproduction in whole or in part without the express written permission of SARGENT Manufacturing Company is prohibited. Patent pending and/or patent www.assaabloydss.com/patents.

UL Listed Hurricane-Resistant HC8800 Rim Exit Device

SARGENT
ASSA ABLOY

HC8800 SERIES RIM EXIT DEVICE

Features
- Designed for standard width stile applications on metal doors. For doors 1-3/4" (44mm) thick.
- Devices are ANSI/BHMA A156.3 - Grade 1
- UL10C (Fire) and UL305 (Panic) listed

Rails are available in 4 sizes, use door width to determine size needed. Rails will be factory cut to size, if door width is supplied
- E Rail for 24" to 32" door widths, No cutting required for 32" door
- F Rail for 33" to 36" door widths, No cutting required for 36" door
- J Rail for 37" to 42" door widths, No cutting required for 42" door
- G Rail for 43" to 48" door widths, No cutting required for 48" door

Note: For additional information on 8800 Series, see page 9

HC8800, 12-HC8800 Series Rim Exit Device
- CHASSIS: DUCTILE IRON
- Requires 2 chassis shims and 2 end bracket shims included with the exit device
- Additional information on HC980 Mullions available in Mullion Section of this catalog

649 Strike
- Supplied standard for panic & fire rated openings
- Surface applied
- Black nylon coated

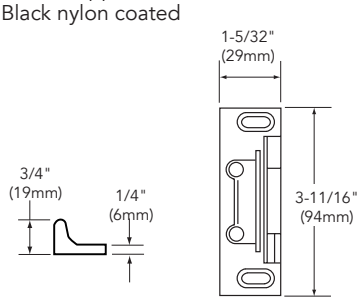

Single Door
(HC8800)
(12-HC8800)

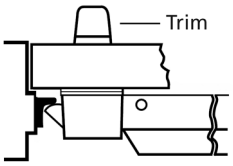

Double Door HC-8800 with HC-980 Mullion

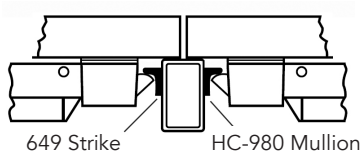

Copyright © 1998-2025, SARGENT Manufacturing Company. All rights reserved. Reproduction in whole or in part without the express written permission of SARGENT Manufacturing Company is prohibited. Patent pending and/or patent www.assaabloydss.com/patents.

UL Listed Hurricane-Resistant HC8800 Functions and Trims

SARGENT
ASSA ABLOY

How to order:

Options	Series	Function	Rail Lgth	Trim	Hand	Outside Finish	Inside Finish	Door Width
12	HC88	13	F	ETL	RHR	15	32D	36"

700 Series ET Trim

Exits with ET Trim, specify lever design after the ET designation (e.g., ETL)

Lever Designs for ET Controls

A, B, E, F, J, L, P, W
Also available with Coastal Series & Studio Collection Levers

ET Designation with Suffix (Used to order ET without device)

HC-8800 Series: 704, 706-8, 710, 713-8, 715-8, 740, 743-8, 744, 746-8, 773-8, 774-8, 775-8 & 776-8

Freewheeling Trim

The lever rotates when the door is locked preventing excessive force from being applied to the horizontal lever

Electrified ET Trim

Voltage must be specified for the following functions: 73, 74, 75 and 76.
Specify: 12VDC or 24VDC

SARGENT Function Numbers	ANSI Function Numbers	Description & Cylinder Info (1-3/4" Door)	ANSI Type 1 HC8800 Panic & Fire
04	03	Night Latch Key Retracts Latch #34 Cylinder Supplied	HC8804 x ET_
06	09	Key unlocks Trim, Trim retracts latch/ Trim relocks when key is removed #41 Cylinder Supplied	HC8806 x ET_
10	01	No outside operation (No Cylinder)	HC8810
10	02	No outside operation (No Cylinder) ET Control is used as Pull Only	HC8810 x ET_
13	08	Key Outside Unlocks/locks Trim #41 Cylinder Supplied	HC8813 x ET_
15	14	Passage Only (No cylinder)	HC8815 x ET_
40	02	Freewheeling Trim - No outside operation (No Cylinder) Dummy Trim	HC8840 x ET_
43	08	Freewheeling Trim - Key Outside Unlocks/locks Trim #41 Cylinder Supplied	HC8843 x ET_
44	03	Freewheeling Trim - Key Retracts Latch #34 Cylinder Supplied	HC8844 x ET_
46	09	Freewheeling Trim - Key unlocks Trim, Trim retracts latch/ Trim relocks when key is removed #41 Cylinder Supplied	HC8846 x ET_
75*		Electrified ET Trim - Fail Safe Power Off, Unlocks Lever, Key Retracts Latch #34 Cylinder Supplied	HC8875 x ET_
76**		Electrified ET Trim - Fail Secure Power Off, Locks Lever, \Key Retracts Latch #34 Cylinder Supplied	HC8876 x ET_

Note: Exit devices are available in all standard finishes, except 14, 15, 26 & 26D. With these finishes, exit devices are supplied in 32 or 32D to match accordingly. 32 or 32D is automatically supplied when 26 or 26D is specified. For nickel finishes, specify 14/32 or 15/32D to receive nickel finished trims and stainless exit devices
• 75 Function without cylinder is available as a 73 Function
** 76 Function without cylinder is available as a 74 Function

Options

HC8800
Mechanical Options: 12- 16- 19- 31- 36- 37- 43- 54- 55- 56- 56-HK- 58- 76- 85- 86- 87- BT- CPC- LD- PL- * SG- TB- **Cylinder Options:** 10- 10-21- 10-63- 11- 11-21- 11-60- 11-63- 11-64- 11-70-7P- 11-72-7P- 11-73-7P- 11-65-73-7P- 21- 51- 52- 60- 63- 64- 70- 72- 73- 65-73- 65-73-7P- 73-7P- 81- 82- F1-82- 83- F1-83- 84- BR- LC- SC- SE-

* Only available with 15, 26D and 32D finishes

Pull Section			Trim Designations • Use three letter designations (Ex "PTB") when ordering the Exit Device with Trim • Use the six digit designation (Ex "814-MSL") when ordering trim without an Exit Device, always specify finish					
SARGENT Function Numbers	ANSI Function Numbers	Description & Cylinder Info. (1-3/4" Door)						 HC800 Panic & Fire
04	03	Night Latch-Key Retracts Latch #41 Cylinder Supplied	814-FSL*	814-FSW*	814-MSL*	814-PSB*	814-STS	HC8804 x Trim Designation
10	02	No O/S Operation or Cylinder (Pull Only)	810-FLL	810-FLW	810-MAL	810-PTB	810-STS	HC8810 x Trim Designation

* FSL, FSW, MSL and PSB trims are used with (HC-& 12-) 8888 and 8804 only and are the same as FLL, FLW, MAL and PTB pulls except for cylinder hole located 3/8" (9mm) lower
Note: FLW & FSW trims are not available in 32(629) or 32D(630)
Note: Pulls and thumb piece trims are not available in 14, 15, 26 or 26D

Available Finishes

Sargent Finishes	BHMA Finishes
03	605
04	606
09	611
10	612
10B	613
10BE	613E
10BL	613L
14	618
15	619
20D	624
26	625
26D	626
32	629
32D	630
BSP	—
WSP	

Copyright © 1998-2025, SARGENT Manufacturing Company. All rights reserved. Reproduction in whole or in part without the express written permission of SARGENT Manufacturing Company is prohibited. Patent pending and/or patent www.assaabloydss.com/patents.

UL Listed Hurricane-Resistant WS8800 Rim Exit Device

SARGENT
ASSA ABLOY

WS8800 SERIES RIM EXIT DEVICE

Features

- WS 8800 available for single hollow metal door applications for 1-3/4" thick door, 3'0" x 7'0" max, with 6" min stile
- Devices are ANSI/BHMA A156.3 - Grade 1
- UL305 (Panic) Listed

WS8800 rails are available in 2 sizes, use door width to determine size needed. Rails will be factory cut to size, if door width is supplied

- E Rail for 24" to 32" door widths, No cutting required for 32" door
- F Rail for 33" to 36" door widths, No cutting required for 36" door

Note: For additional information on 8800 Series, see page 9

649 Strike
- Supplied standard for panic & fire rated openings
- Surface applied
- Black nylon coated

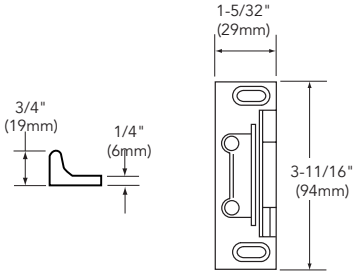

WS8800, 12-WS8800 Series Rim Exit Device
- Chassis: Non Fire Rated - Nonferrous alloy
- Requires 3 chassis shims and 3 end bracket shims included with the exit device

Single Door

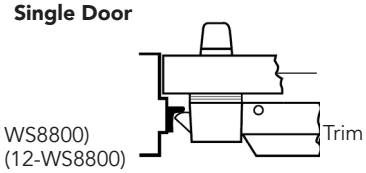

Copyright © 1998-2025, SARGENT Manufacturing Company. All rights reserved. Reproduction in whole or in part without the express written permission of SARGENT Manufacturing Company is prohibited. Patent pending and/or patent www.assaabloydss.com/patents.

UL Listed Hurricane-Resistant WS8800 Functions and Trims

SARGENT
ASSA ABLOY

How to order:

Options	Series	Function	Rail Lgth	Trim	Hand	Outside Finish	Inside Finish	Door Width
12	WS88	13	F	ETL	RHR	15	32D	36"

700 Series ET Trim

Exits with ET Trim, specify lever design after the ET designation (e.g., ETL)

Lever Designs for ET Controls

A, B, E, F, J, L, P, W
Also available with Coastal Series & Studio Collection Levers

ET Designation with Suffix (Used to order ET without device)

HC-8800 Series: 704, 706-8, 710, 713-8, 715-8, 740, 743-8, 744, 746-8, 773-8, 774-8, 775-8 & 776-8

Freewheeling Trim

The lever rotates when the door is locked preventing excessive force from being applied to the horizontal lever

Electrified ET Trim

Voltage must be specified for the following functions: 73, 74, 75 and 76.
Specify: 12VDC or 24VDC

SARGENT Function Numbers	ANSI Function Numbers	Description & Cylinder Info (1-3/4" Door)	ANSI Type 1 WS8800 Panic & Fire
04	03	Night Latch Key Retracts Latch #34 Cylinder Supplied	WS8804 x ET_
06	09	Key unlocks Trim, Trim retracts latch/ Trim relocks when key is removed #41 Cylinder Supplied	WS8806 x ET_
10	01	No outside operation (No Cylinder)	WS8810
10	02	No outside operation (No Cylinder) ET Control is used as Pull Only	WS8810 x ET_
13	08	Key Outside Unlocks/locks Trim #41 Cylinder Supplied	WS8813 x ET_
15	14	Passage Only (No cylinder)	WS8815 x ET_
40	02	Freewheeling Trim - No outside Operation (No Cylinder) Dummy Trim	WS8840 x ET_
43	08	Freewheeling Trim - Key Outside Unlocks/locks Trim #41 Cylinder Supplied	WS8843 x ET_
44	03	Freewheeling Trim - Key Retracts Latch #34 Cylinder Supplied	WS8844 x ET_
46	09	Freewheeling Trim - Key unlocks Trim, Trim retracts latch/ Trim relocks when key is removed #41 Cylinder Supplied	WS8846 x ET_
75*		Electrified ET Trim - Fail Safe Power Off, Unlocks Lever, Key Retracts Latch #34 Cylinder Supplied	WS8875 x ET_
76**		Electrified ET Trim - Fail Secure Power Off, Locks Lever, Key Retracts Latch #34 Cylinder Supplied	WS8876 x ET_

Note: Exit devices are available in all standard finishes, except 14, 15, 26 & 26D. With these finishes, exit devices are supplied in 32 or 32D to match accordingly. 32 or 32D is automatically supplied when 26 or 26D is specified. For nickel finishes, specify 14/32 or 15/32D to receive nickel finished trims and stainless exit devices
* 75 Function without cylinder is available as a 73 Function
** 76 Function without cylinder is available as a 74 Function

Pull Section			Trim Designations • Use three letter designations (Ex "PTB") when ordering the Exit Device with trim • Use the six digit designation (Ex "810-MAL") when ordering trim without an Exit Device, always specify finish					
SARGENT Function Numbers	ANSI Function Numbers	Description & Cylinder Info. (1-3/4" Door)						WS800 Panic & Fire
04	03	Night Latch-Key Retracts Latch #34 Cylinder Supplied	814-FSL*	814-FSW*	814-MSL*	814-PSB*	814-STS	WS8804 x Trim Designation
10	02	No O/S Operation or Cylinder (Pull Only)	810-FLL	810-FLW	810-MAL	810-PTB	810-STS	WS8810 x Trim Designation

* FSL, FSW, MSL and PSB trims are used with (HC-& 12-) 8888 and 8804 only and are the same as FLL, FLW, MAL and PTB pulls except for cylinder hole located 3/8" (9mm) lower
Note: FLW & FSW trims are not available in 32(629) or 32D(630)
Note: Pulls and thumb piece trims are not available in 14, 15, 26 or 26D

Options

HC8800 & WS8800
Mechanical Options:
12-
16-
19-
31-
36-
37-
43-
54-
55-
56-
56-HK-
58-
76-
85-
86-
87-
BT-
CPC-
LD-
PL-
* SG-
TB-
Cylinder Options:
10-
10-21-
10-63-
11-
11-21-
11-60-
11-63-
11-64-
11-70-7P-
11-72-7P-
11-73-7P-
11-65-73-7P-
21-
51-
52-
60-
63-
64-
70-
72-
73-
65-73-
65-73-7P-
73-7P-
81-
82-
F1-82-
83-
F1-83-
84-
BR-
LC-
SC-
SE-

* Only available with 15, 26D and 32D finishes

Available Finishes

Sargent Finishes	BHMA Finishes
03	605
04	606
09	611
10	612
10B	613
10BE	613E
10BL	613L
14	618
15	619
20D	624
26	625
26D	626
32	629
32D	630
BSP	—
WSP	

Copyright © 1998-2025, SARGENT Manufacturing Company. All rights reserved. Reproduction in whole or in part without the express written permission of SARGENT Manufacturing Company is prohibited. Patent pending and/or patent www.assaabloydss.com/patents.

UL Listed Hurricane-Resistant WS8900 Mortise Lock Exit Device

SARGENT
ASSA ABLOY

WS8900 SERIES MORTISE LOCK EXIT DEVICE

Features

- WS8900 available for Single Hollow Metals Doors applications for 1-3/4" Thick door, 3'0" x 7'0" Max. Door with 6" Min Stile
- Requires 4 chassis shims and 4 end bracket shims to be included with exit device
- Devices are ANSI/BHMA A156.3 - Grade 1
- UL305 (Panic) Listed

WS8900 rails are available in 2 sizes, use door width to determine size needed. Rails will be factory cut to size, if door width is supplied

- E Rail for 24" to 32" door widths, No cutting required for 32" door
- F Rail for 33" to 36" door widths, No cutting required for 36" door

Note: For additional information on 8900 Series and Windstorm Ratings for the standard 8900 Series, see page 13

Single Door

WS8900, 12-WS8900 Series Mortise Exit Device

- Requires 4 chassis shims and 4 end bracket shims included with the exit device

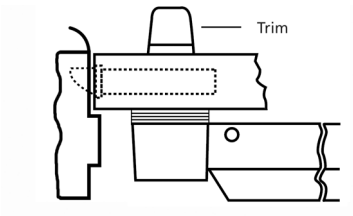

C908 Standard Strike

- Curved lip ANSI A-115.1
- Handed. 1-1/4" (32mm) lip standard
- Longer lips in increments of 1/4" (6mm) through 2-7/8" (73mm) available
- Black nylon coated

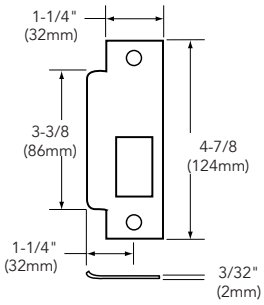

Copyright © 1998-2025, SARGENT Manufacturing Company. All rights reserved. Reproduction in whole or in part without the express written permission of SARGENT Manufacturing Company is prohibited. Patent pending and/or patent www.assaabloydss.com/patents.

UL Listed Hurricane-Resistant WS8900 Functions and Trims

SARGENT
ASSA ABLOY

How to order:

Options	Series	Function	Rail Lgth	Trim	Hand	Outside Finish	Inside Finish	Door Width
11-63-	WS89	13	F	ETL	RHR	14	32	36"

700 Series ET Trim

Exits with ET Trim, specify lever design after the ET designation (e.g., ETL)

Lever Designs for ET Controls

A, B, E, F, J, L, P, W
Also available with Coastal Series & Studio Collection Levers

ET Designation with Suffix (Used to order ET without device)

WS8900 Series: 704, 706, 710, 713, 715, 716, 740, 743, 744, 773, 774, 775 & 776

Freewheeling Trim

The lever rotates when the door is locked preventing excessive force from being applied to the horizontal lever

Electrified ET Trim

Voltage must be specified for the following functions: 73, 74, 75 and 76.
Specify: 12VDC or 24VDC

SARGENT Function Numbers	ANSI Function Numbers	Description & Cylinder Info (1-3/4" Door)	WS8900 Panic & Fire
04	03	Night Latch Key Retracts Latch #46 Cylinder Supplied	WS8904 x ET_
06	09	Key unlocks Trim, Trim retracts Latch/ Trim relocks when key is removed #41 Cylinder Supplied	WS8906 x ET_
10	01	No outside operation (No Cylinder)	WS8910
10	02	No outside operation (No Cylinder) ET Control is used as Pull Only	WS8910 x ET_
13	08	Key Outside Unlocks/locks Trim #41 Cylinder Supplied	WS8913 x ET_
15	14	Passage Only (No cylinder)	WS8915 x ET_
16	10	Key Outside Retracts Latch; Key Inside Unlocks/Locks O/S Trim O/S #46 & I/S #34 Cylinder Supplied	WS8916 x ET_
40	02	Freewheeling Trim - No outside operation (No Cylinder) Dummy Trim	WS8940 x ET_
43	08	Freewheeling Trim - Key Outside Unlocks/locks Trim #41 Cylinder Supplied	WS8943 x ET_
44	03	Freewheeling Trim - Key Retracts Latch For 1-3/4" Door #46 Cylinder Supplied	WS8944 x ET_
75*		Electrified ET Trim - Fail Safe Power Off, Unlocks Lever, Key Retracts Latch For 1-3/4" Door #46 Cylinder Supplied	WS8975 x ET_
76**		Electrified ET Trim - Fail Secure Power Off, Locks Lever, Key Retracts Latch For 1-3/4" Door #46 Cylinder Supplied	WS8976 x ET_

Note: Exit devices are available in all standard finishes, except 14, 15, 26 & 26D. With these finishes, exit devices are supplied in 32 or 32D to match accordingly. 32 or 32D is automatically supplied when 26 or 26D is specified. For nickel finishes, specify 14/32 or 15/32D to receive nickel finished trims and stainless exit devices
* 75 Function without cylinder is available as a 73 Function
** 76 Function without cylinder is available as a 74 Function

Pull & Thumbpiece Trim Section			Trim Designations • Use three letter designations (Ex "PTB") when ordering the Exit Device with trim • Use the six digit designation (Ex "866-MAL") when ordering trim without an Exit Device, always specify finish & hand					
SARGENT Function Numbers	ANSI Function Numbers	Description & Cylinder Info. (1-3/4" Door)						WS8900 Panic & Fire
04	03	Night Latch Key Retracts Latch #41 Cylinder Supplied	814-FLL	814-FLW	814-MAL	814-PTB	814-STS	WS8904 x Trim Designation
10	02	No O/S Operation or Cylinder (Pull Only)	810-FLL	810-FLW	810-MAL	810-PTB	810-STS	WS8910 x Trim Designation
28	15	Passage Only (No cylinder)	828-FLL	828-FLW	828-MAL	828-PTB	828-STS	WS8928 x Trim Designation
63	05	Key Outside Unlocks/ locks Thumbpiece #41 Cylinder Supplied	866-FLL	866-FLW	866-MAL	866-PTB	866-STS	WS8963 x Trim Designation
66	07	Key Outside Retracts Latch; Key Inside Unlocks/Locks O/S Trim O/S #34 & I/S #41 Supplied	866-FLL	866-FLW	866-MAL	866-PTB	866-STS	WS8966 x Trim Designation

Note: Thumbpiece trims for 63 and 66 function devices are identical and are identified as 66 function when trim is ordered separately
Note: FLW trim is not available in 32(629) or 32D(630)
Note: Thumbpiece Trims used with Mortise Lock Exit Devices are handed
Note: Pulls and thumb piece trims are not available in 14, 15, 26 or 26D

Options

WS8900
Mechanical Options: 12- 16- 19- 23- 31- 36- 37- 43- 54- 55- 56- 56-HK- 58- 76- 85- 86- 87- BT- CPC- LD- PL- ** SG- **Cylinder Options:** 10- 10-21- 10-63- 11- 11-21- 11-60- 11-63- 11-64- 11-70-7P- 11-72-7P- 11-73-7P- 11-65-73-7P- 21- 51- 52- 60- 63- 64- 70- 72- 73- 65-73- 65-73-7P- 73-7P- 81- 82- F1-82- 83- F1-83- 84- BR- LC- *SC- *SE-

* Options are not available with the following functions: 04 x ET, 16, 44, 75 & 76
** Only available with 15, 26D and 32D finishes

Available Finishes

Sargent Finishes	BHMA Finishes
03	605
04	606
09	611
10	612
10B	613
10BE	613E
10BL	613L
14	618
15	619
20D	624
26	625
26D	626
32	629
32D	630
BSP	—
WSP	

Copyright © 1998-2025, SARGENT Manufacturing Company. All rights reserved. Reproduction in whole or in part without the express written permission of SARGENT Manufacturing Company is prohibited. Patent pending and/or patent www.assaabloydss.com/patents.

UL Listed Hurricane Resistant HC4-8700 Surface Vertical Rod Device

SARGENT
ASSA ABLOY

HC4-8700 SERIES SURFACE VERTICAL ROD EXIT DEVICE

Features
- Meets the abuse and high wind loads required by Florida building code including HVHZ.
- Devices are ANSI/BHMA A156.3 - Grade 1

Note: For additional information on 8700 Series, see page 14

Openings	8'0" x 8'0" (2438mm x 2438mm)
Strikes	659 Top Strike in frame with larger mounting screws for both top and bottom cases. 655 bottom strike furnished standard
Rail sizes as determined by door width	Rails are available in 4 sizes, use door width to determine size needed. Rails will be factory cut to size, if door width is supplied • E Rail for 24" to 32" door widths, No cutting required for 32" door • F Rail for 33" to 36" door widths, No cutting required for 36" door • J Rail for 37" to 42" door widths, No cutting required for 42" door • G Rail for 43" to 48" door widths, No cutting required for 48" door
Strike	659 Top Strike (Panic and Fire Rated) 655 Bottom Strike (Panic and Fire Rated)
Dogging Feature	Hex key dogging standard on non fired rated devices; specify 16- for cylinder dogging (#41 cylinder supplied)
Top & Bottom Bolt	Stainless steel
Device Centerline	41" (1041 mm) for Standard Applications 38" (965mm) for elementary schools
Door/Opening Height	**Must be specified** - 96" (2438mm) Max Door Opening
Fire Exit Hardware	See Chart – Page 6

Note: Approved single openings cannot be used as a pair, but a door in a pair can be used as a single opening.

659 Top strike
- For hc4-8700/12-hc4-8700
- Latchbolt nylon coated
- Stainless steel

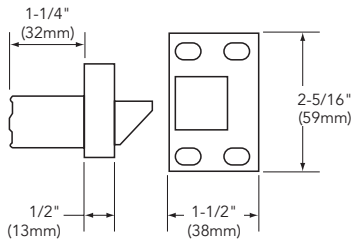

655 Bottom strike
- For hc4-8700/12-hc4-8700
- Stainless steel
- Black nylon coated

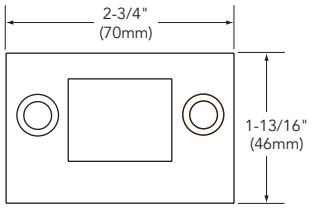

Copyright © 1998-2025, SARGENT Manufacturing Company. All rights reserved. Reproduction in whole or in part without the express written permission of SARGENT Manufacturing Company is prohibited. Patent pending and/or patent www.assaabloydss.com/patents.

UL Listed Hurricane Resistant HC4-8700 Functions and Trims

SARGENT
ASSA ABLOY

How to order:

Options	Series	Function	Rail Lgth	Trim	Hand	Outside Finish	Inside Finish	Door Width	Door Height	AFF
10-63-	HC4-87	13	F	ETL	RHR	15	32D	36"	84"	41"

700 Series ET Trim

Exits with ET Trim, specify lever design after the ET designation (e.g., ETL)

Lever Designs for ET Controls

A, B, E, F, J, L, P, W
Also available with Coastal Series & Studio Collection Levers

ET Designation with Suffix (Used to order ET without device)

HC4-8700 Series: 706, 710, 713, 715, 740, 743, 746, 773 & 774

Freewheeling Trim

The lever rotates when the door is locked preventing excessive force from being applied to the horizontal lever

Electrified ET Trim

Voltage must be specified for the following functions: 73 and 74.
Specify: 12VDC or 24VDC

SARGENT Function Numbers	ANSI Function Numbers	Description & Cylinder Info (1-3/4" Door)	ANSI Type 2 HC4-8700 Panic & Fire
06	09	Key unlocks Trim, Trim retracts latch/ Trim relocks when key is removed #41 Cylinder Supplied	HC4-8706 x ET_
10	01	No outside operation (No Cylinder)	HC4-8710
10	02	No outside operation (No Cylinder) ET Control is used as Pull Only	HC4-8710 x ET_
13	08	Key Outside Unlocks/locks Trim #41 Cylinder Supplied	HC4-8713 x ET_
15	14	Passage Only (No cylinder)	HC4-8715 x ET_
40	02	Freewheeling Trim - No outside operation (No Cylinder) Dummy Trim	HC4-8740 x ET_
43	08	Freewheeling Trim - Key Outside Unlocks/locks Trim #41 Cylinder Supplied	HC4-8743 x ET_
46	09	Freewheeling Trim - Key unlocks Trim, Trim retracts latch/ relocks when key is removed #41 Cylinder Supplied	HC4-8746 x ET_
73		Electrified ET Trim - Fail Safe Power Off, Unlocks Lever (No Cylinder)	HC4-8773 x ET_
74		Electrified ET Trim - Fail Secure Power Off, Locks Lever (No Cylinder)	HC4-8774 x ET_

Note: Exit devices are available in all standard finishes, except 14, 15, 26 & 26D. With these finishes, exit devices are supplied in 32 or 32D to match accordingly. 32 or 32D is automatically supplied when 26 or 26D is specified. For nickel finishes, specify 14/32 or 15/32D to receive nickel finished trims and stainless exit devices
Note: AFF means Above Finished Floor, center line of rail Above Finished Floor

Pull & Thumbpiece Trim Section			Trim Designations • Use three letter designations (Ex "PTB") when ordering the Exit Device with trim • Use the six digit designation (Ex "866-MAL") when ordering trim without an Exit Device, always specify finish & hand					
SARGENT Function Numbers	ANSI Function Numbers	Description & Cylinder Info. (1-3/4" Door)						HC4-8700 Panic & Fire
10	02	Pull Only (No Cylinder)	810-FLL	810-FLW	810-MAL	810-PTB	810-STS	HC4-8710 x Trim Designation

Note: FLW trim is not available in 32(629) or 32D(630)
Note: Pulls and thumb piece trims are not available in 14, 15, 26 or 26D except

Options

HC4-8700
Mechanical Options:
12-
16-
19-
31-
36-
37-
43-
53-
54-
55-
56-
56-HK-
58-
59-
BC-59-
76-
85-
86-
87-
BT-
CPC-
LD-
PL-
* SG-
TB-
Cylinder Options:
10-
10-21-
10-63-
11-
11-21-
11-60-
11-63-
11-64-
11-70-7P-
11-72-7P-
11-73-7P-
11-65-73-7P-
21-
51-
52-
60-
63-
64-
70-
72-
73-
65-73-
65-73-7P-
73-7P-
81-
82-
F1-82-
83-
F1-83-
84-
BR-
LC-
SC-
SE-

* Only available with 15, 26D and 32D finishes

Available Finishes

Sargent Finishes	BHMA Finishes
03	605
04	606
09	611
10	612
10B	613
10BE	613E
10BL	613L
14	618
15	619
20D	624
26	625
26D	626
32	629
32D	630
BSP	—
WSP	

Copyright © 1998-2025, SARGENT Manufacturing Company. All rights reserved. Reproduction in whole or in part without the express written permission of SARGENT Manufacturing Company is prohibited. Patent pending and/or patent www.assaabloydss.com/patents.

UL Listed Hurricane-Resistant HC8700 Surface Vertical Rod Exit Device

SARGENT
ASSA ABLOY

HC8700 SERIES SURFACE VERTICAL ROD EXIT DEVICE

Features
- Meets the abuse and high wind loads required by Florida building code including HVHZ.
- Accepted & approved with CURRIES hollow metal doors and McKINNEY hinges. Any substitution of hardware makes the Hurricane Code inapplicable.
- Devices are ANSI/BHMA A156.3 - Grade 1

Note: For additional information on 8700 Series, see page 14

Openings	8'0" x 8'0" (2438mm x 2438mm) Curries 16 gauge 747 flush, S edge
Frames	CURRIES 16 gauge KD, Pipe spacer anchors only, 12 gauge full sleeve reinforcing and existing opening anchor in head of frame
Hinges	McKINNEY TA2714 or T2714
Hardware Configuration 1	SARGENT HC8700 or 12-HC8700 Exit Devices on both leaves
Hardware Configuration 2 Vertical Rod Exit & Mortise Lock	SARGENT 8200 Series mortise lock (active), SARGENT HC8700 or 12-HC8700 exit devices (inactive),Ives 360 surface bolts at 5 3/4" (147mm) at centerline
Strikes	654 top bolt in frame with larger mounting screws for both top and bottom cases. 655 bottom strike furnished standard
Rail sizes as determined by door width	Rails are available in 4 sizes, use door width to determine size needed. Rails will be factory cut to size, if door width is supplied • E Rail for 24" to 32" door widths, No cutting required for 32" door • F Rail for 33" to 36" door widths, No cutting required for 36" door • J Rail for 37" to 42" door widths, No cutting required for 42" door • G Rail for 43" to 48" door widths, No cutting required for 48" door
Strike	654 Top Latch (Panic and Fire Rated) 655 Bottom Strike (Panic and Fire Rated)
Dogging Feature	Hex key dogging standard on non fired rated devices; specify 16- for cylinder dogging (#41 cylinder supplied)
Top & Bottom Bolt	Stainless steel
Device Centerline	41" (1041 mm) for Standard Applications 38" (965mm) for elementary schools
Door/Opening Height	**Must be specified** - 96" (2438mm) Max Door Opening
Fire Exit Hardware	See Chart – Page 6

Note: Approved single openings cannot be used as a pair, but a door in a pair can be used as a single opening.

654 Top Latch
- For HC8700/12-HC8700
- Latchbolt nylon coated
- Stainless steel

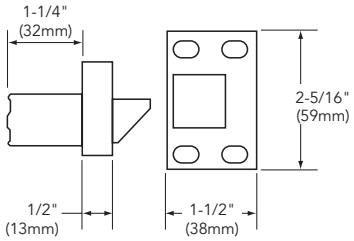

655 Bottom Strike
- For HC8700/12-HC8700
- Stainless steel
- Black nylon coated

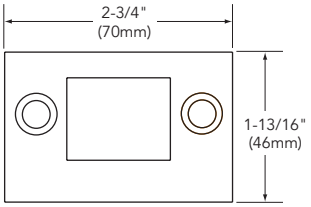

Copyright © 1998-2025, SARGENT Manufacturing Company. All rights reserved. Reproduction in whole or in part without the express written permission of SARGENT Manufacturing Company is prohibited. Patent pending and/or patent www.assaabloydss.com/patents.

UL Listed Hurricane-Resistant HC8700 Functions and Trims

SARGENT
ASSA ABLOY

How to order:

Options	Series	Function	Rail Lgth	Trim	Hand	Outside Finish	Inside Finish	Door Width	Door Height	AFF
10-63-	HC87	13	F	ETL	RHR	15	32D	36"	84"	41"

700 Series ET Trim

Exits with ET Trim, specify lever design after the ET designation (e.g., ETL)

Lever Designs for ET Controls

A, B, E, F, J, L, P, W
Also available with Coastal Series & Studio Collection Levers

ET Designation with Suffix (Used to order ET without device)

HC8700 Series: 706, 710, 713, 715, 740, 743, 746, 773 & 774

SARGENT Function Numbers	ANSI Function Numbers	Description & Cylinder Info (1-3/4" Door)	ANSI Type 2 HC8700 Panic & Fire
06	09	Key unlocks Trim, Trim retracts latch/ Trim relocks when key is removed #41 Cylinder Supplied	HC8706 x ET_
10	01	No outside operation (No Cylinder)*	HC8710
10	02	No outside operation (No Cylinder)* ET Control is used as Pull Only	HC8710 x ET_
13	08	Key Outside Unlocks/locks Trim #41 Cylinder Supplied	HC8713 x ET_
15	14	Passage Only (No cylinder)	HC8715 x ET_
40	02	Freewheeling Trim - No outside operation (No Cylinder)* Dummy Trim	HC8740 x ET_
43	08	Freewheeling Trim - Key Outside Unlocks/locks Trim #41 Cylinder Supplied	HC8743 x ET_
46	09	Freewheeling Trim - Key unlocks Trim, Trim retracts latch/ relocks when key is removed #41 Cylinder Supplied	HC8746 x ET_
73		Electrified ET Trim - Fail Safe Power Off, Unlocks Lever (No Cylinder)*	HC8773 x ET_
74		Electrified ET Trim - Fail Secure Power Off, Locks Lever (No Cylinder)*	HC8774 x ET_

Freewheeling Trim

The lever rotates when the door is locked preventing excessive force from being applied to the horizontal lever

Note: Exit devices are available in all standard finishes, except 14, 15, 26 & 26D. With these finishes, exit devices are supplied in 32 or 32D to match accordingly. 32 or 32D is automatically supplied when 26 or 26D is specified. For nickel finishes, specify 14/32 or 15/32D to receive nickel finished trims and stainless exit devices
Note: AFF means Above Finished Floor, center line of rail Above Finished Floor
* Cylinder Override is available with a 306 Aux Control
Example Order: 8773F 12V x ETMG x 306 x RHR x 32D x 36"w x 84"h

Electrified ET Trim

Voltage must be specified for the following functions: 73 and 74.
Specify: 12VDC or 24VDC

300 Series* Auxiliary Control & 862 Pull		SARGENT Function Numbers	ANSI Function Numbers	Description & Cylinder Info (1-3/4" Door)	HC8700 Panic & Fire
300 Series Aux. Control	862 Pull	06	12	Key unlocks Turn, Turn retracts latch/ Turn relocks when key is removed #41 Cylinder Supplied	HC8710 x 306
		10	02	862 Pull Only (Optional Pulls: 863 & 864)	HC8710 x 862
		13	11	Key Outside Unlocks/locks Turn #41 Cylinder Supplied	HC8710 x 313

Pull & Thumbpiece Trim Section			Trim Designations • Use only letter designations when ordering the Exit Device with trim • Use the six digit designation (Ex "866-MAL") when ordering trim without an Exit Device, always specify finish					
SARGENT Function Numbers	ANSI Function Numbers	Description & Cylinder Info. (1-3/4" Door)						HC8700 Panic & Fire
10	02	Pull Only (No Cylinder)*	810-FLL	810-FLW	810-MAL	810-PTB	810-STS	HC8710 x Trim Designation

* Cylinder Override is available with a 306 Aux Control
Note: FLW trim is not available in 32(629) or 32D(630)
Note: Pulls and thumb piece trims are not available in 14, 15, 26 or 26D

Options

HC8700
Mechanical Options:
12-
16-
19-
31-
36-
37-
43-
53-
54-
55-
56-
56-HK-
58-
59-
BC-59-
76-
85-
86-
87-
BT-
CPC-
LD-
PL-
* SG-
TB-
Cylinder Options:
10-
10-21-
10-63-
11-
11-21-
11-60-
11-63-
11-64-
11-70-7P-
11-72-7P-
11-73-7P-
11-65-73-7P-
21-
51-
52-
60-
63-
64-
70-
72-
73-
65-73-
65-73-7P-
73-7P-
81-
82-
F1-82-
83-
F1-83-
84-
BR-
LC-
SC-
SE-

* Only available with 15, 26D and 32D finishes

Available Finishes

Sargent Finishes	BHMA Finishes
03	605
04	606
09	611
10	612
10B	613
10BE	613E
10BL	613L
14	618
15	619
20D	624
26	625
26D	626
32	629
32D	630
BSP	—
WSP	

Copyright © 1998-2025, SARGENT Manufacturing Company. All rights reserved. Reproduction in whole or in part without the express written permission of SARGENT Manufacturing Company is prohibited. Patent pending and/or patent www.assaabloydss.com/patents.

SARGENT
ASSA ABLOY

UL Listed Tornado-Resistant FM8700 Surface Vertical Rod Exit Device

FM8700 SERIES SURFACE VERTICAL ROD EXIT DEVICE

FEATURES
- 2-point latching exit device
- UL Listed in compliance with ICC 500 (2014/2020) and FEMA P-361 (2015)
- Specially machined rail and internal components make the FM8700 sturdier and more robust than standard products
- Devices are ANSI/BHMA A156.3 - Grade 1
- UL10C (Fire) Listed

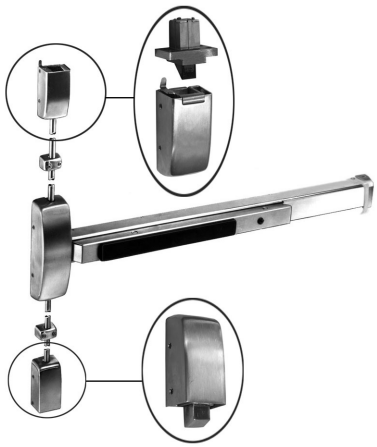

Specifications

Doors and Frames	**CECO DOOR and CURRIES StormPro® Series Door Assemblies** - 6'0" x 6'8" to 8'-0" x 8'-0" for pairs of fire rated doors - 3'0" x 6'8" to 4'-0" x 8'-0" for single fire rated doors (Requires 4 Thermal Pins)
Hardware	SARGENT FM8700 or 12-FM8700 Exit Device on both leaves or single door applications
Hinges	McKinney SP3386/SP3786 StormPro® Tornado Resistant Butt Hinges McKinney MCK-HG305 Continuous Hinges Markar HG305 Continuous Hinges
Strikes	659 Top Strike in frame and 653 Bottom Strike furnished standard 655 Bottom Strike optional
Shim Kit	569 Shim Kit furnished standard
Rail sizes as determined by door width	Rails are available in 3 sizes, use door width to determine size needed. Rails will be factory cut to size, if door width is supplied • F Rail for 36" door width • J Rail for 37" to 42" door widths, No cutting required for 42" door • G Rail for 43" to 48" door widths, No cutting required for 48" door
Dogging Feature	Hex key dogging available on non fired rated devices only
Electric Options	54- Outside Lever Monitoring Option
Mounting Fasteners	Supplied standard with machine screws and with throughbolts for the latch cases
Top & Bottom Bolt	Stainless steel
Device Centerline from Finished Floor	41" (1041mm) for Standard Applications 38" (965mm) for elementary schools
Center Case Dimensions	8-3/8" (213mm) x 2-5/8" (67mm)
Projection	Pushbar Neutral – 3" (76mm) Pushbar Depressed – 2-1/8" (54mm)
Fire Exit Hardware	See Chart – Page 6

569 Shim Kit

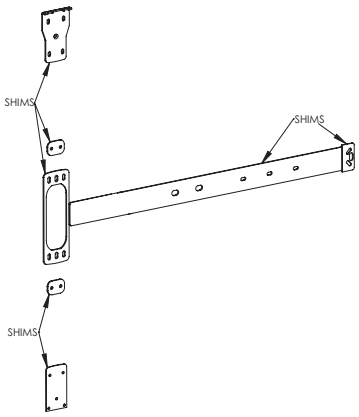

659 Top Strike
- For Panic & Fire Rated
- Latchbolt nylon coated
- Stainless steel

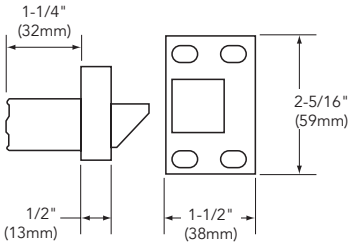

653 Bottom Strike
- Provided as standard
- Panic and Fire-Rated

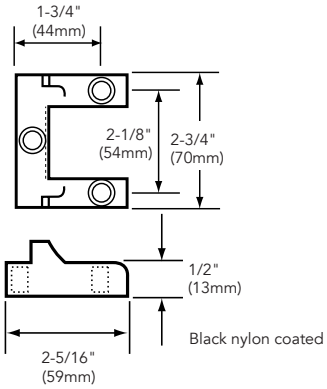

655 Bottom Strike
- Stainless steel
- Black nylon coated
- UL305, UL10C and BHMA Grade 2 Certified

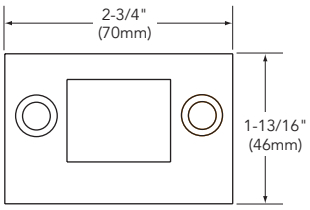

Note: See assembly guide card UL website for all available FEMA and ICC 500 (2014/2020) rated options
655 Strike must be specified at time of order. Default option remains 635 strike

Copyright © 1998-2025, SARGENT Manufacturing Company. All rights reserved. Reproduction in whole or in part without the express written permission of SARGENT Manufacturing Company is prohibited. Patent pending and/or patent www.assaabloydss.com/patents.

SARGENT
ASSA ABLOY

UL Listed Tornado-Resistant FM8700 Functions and Trims

How to order:

Options	Series	Function	Rail Lgth	Trim	Hand	Outside Finish	Inside Finish	Door Width	Door Height	AFF
12-	FM87	06	F	ETL	RHR	15	32D	36"	84"	41"

700 Series ET Trim
Exits with ET Trim, specify lever design after the ET designation (e.g., ETL)

Lever Designs for ET Controls
A, B, E, F, J, L, P, W
Also available with Coastal Series & Studio Collection Levers

ET Designation with Suffix (Used to order ET without device)
FM8700 Series: 706, 710, 740, 743, 746 & 774

Freewheeling Trim
The lever rotates when the door is locked preventing excessive force from being applied to the horizontal lever

Electrified ET Trim
Voltage must be specified for the following functions: 73 and 74.
Specify: 12VDC or 24VDC

SARGENT Function Numbers	ANSI Function Numbers	Description & Cylinder Info (1-3/4" Door)	ANSI Type 2 FM8700 (Panic & Fire)
06	09	Key unlocks Trim, Trim retracts latch/ Trim relocks when key is removed #41 Cylinder Supplied	FM8706 x ET_
10	01	No outside operation (No Cylinder)*	FM8710
10	02	No outside operation (No Cylinder)* ET Control is used as Pull Only	FM8710 x ET_
13	08	Key oustide unlocks/locks trim #41 cylinder supplied	FM8713 x ET_
40	02	Freewheeling Trim - No outside operation (No Cylinder)* Dummy Trim	FM8740 x ET_
43	08	Freewheeling Trim - Key Outside Unlocks/locks Trim #41 Cylinder Supplied	FM8743 x ET_
46	09	Freewheeling Trim - Key unlocks Trim, Trim retracts latch/ relocks when key is removed #41 Cylinder Supplied	FM8746 x ET_
74		Electrified ET Trim - Fail Secure Power Off, Locks Lever (No Cylinder)*	FM8774 x ET_

Note: Exit devices are available in all standard finishes, except 14, 15, 26 & 26D. With these finishes, exit devices are supplied in 32 or 32D to match accordingly. 32 or 32D is automatically supplied when 26 or 26D is specified. For nickel finishes, specify 14/32 or 15/32D to receive nickel finished trims and stainless exit devices
Note: AFF means Above Finished Floor, center line of rail Above Finished Floor
* Cylinder Override is available with a 306 Aux Control
Example Order: FM8774F 12V x ETMG x 306 x RHR x 32D x 36"w x 84"h

300 Series* Auxiliary Control	SARGENT Function Numbers	ANSI Function Numbers	Description & Cylinder Info (1-3/4" Door)	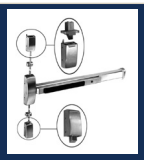 FM8700 Panic & Fire
300 Series Aux. Control	06	12	Key unlocks Turn, Turn retracts latch/ Turn relocks when key is removed #41 Cylinder Supplied	FM8710 x 306
	13	11	Key Outside Unlocks/locks Turn #41 Cylinder Supplied	FM8710 x 313

Options

FM8700
Mechanical Options:
12-
36-
37-
43-
54-
76-
85-
86-
87-
CPC-
LD-
PL-
* SG-
TB-
Cylinder Options:
10-
10-21-
10-63-
11-
11-21-
11-60-
11-63-
11-64-
11-70-7P-
11-72-7P-
11-73-7P-
11-65-73-7P-
21-
51-
52-
60-
63-
64-
70-
72-
73-
65-73-
65-73-7P-
73-7P-
81-
82-
F1-82-
83-
F1-83-
84-
BR-
LC-
SC-
SE-

* Only available with 15, 26D and 32D finishes

Available Finishes

Sargent Finishes	BHMA Finishes
03	605
04	606
09	611
10	612
10B	613
10BE	613E
10BL	613L
14	618
15	619
20D	624
26	625
26D	626
32	629
32D	630
BSP	—
WSP	

Copyright © 1998-2025, SARGENT Manufacturing Company. All rights reserved. Reproduction in whole or in part without the express written permission of SARGENT Manufacturing Company is prohibited. Patent pending and/or patent www.assaabloydss.com/patents.

ElectroLynx® Information and Option Compatibility Chart

SARGENT
ASSA ABLOY

ELECTROLYNX CONNECTOR & COLOR CHART

Electrifed Trim (Solenoid ET and/or 54-) requires its own QC8 Hinge

Product	8 Pin Connector							
	1- Black	2- Red	3- White	4- Green	5- Orange	6- Blue	7- Brown	8- Yellow
Electrified Exit Trim	**Power**		**Lever Monitoring**					
Solenoid Functions and Lever Monitoring	solenoid ET Trim		54- Switch Option					
	NEG	POS	C	NO	NC			

Note: For more information on ElectroLynx® Retrofit Kits and harnesses, see instruction document A7738, located at the SARGENT web site

Electrified Exit Devices will require their own QC8 or QC12 Hinge as determined by specified options (see chart below)

Product	8 Pin Connector								4 Pin Connector				Flying Leads		
	1- Black	2- Red	3- White	4- Green	5- Orange	6- Blue	7- Brown	8- Yellow	9- Violet	10- Gray	11- Pink	12- Tan	13-Red/ Green	14-Red/ Yellow	14-Red/ Black

Exit Devices	Power		Latch Monitoring			Rail Monitoring			56-	
80 Series Exits	56- & 58-		53- Switch Option			55- Switch Option			56- Timer Circuit	
	NEG	POS	C	53-NO 56-EG	53-NC 53-56-NO	C	NO	NC	A	B

Delayed Egress Exit Devices															
59-80 Series Electroguard	Power		Fire Alarm	Earth Ground	External Inhibit	Door Status	Remote Alarm Relay			LBM - OPTION			VOICE/GANG		
	NEG	POS					C	NO	NC	C	NO	NC	C	NO	NC

All electrical options are supplied with ElectroLynx® connectors and require McKINNEY QC Hinges and cables to complete the system

Electrical Option Availability Chart

Primary Options	Compatible Options								
12- Fire Rated	AL-	BT-			53-	55-	56-	58-	59-
*AL- Alarmed Exit			12-		53-			58-	
16- Cylinder Dogging					53-	55-	56-	58-	
53- Latch Monitoring	AL-		12-	16-‡-		55-	56-	58-	
55- Rail Monitoring			12-	16-‡-	53-		56-	58-	
56- Electric Latch Retraction			12-	16-‡-	53-	55-			
58- Electric Dogging	AL-		12-	16-‡-	53-	55-			
**59- Electroguard®			12-						

How to use this chart: Select appropriate option in the left column, under "Primary Option", then follow the row to find compatible options.
Note: Underlined compatible options affect minimum door width. Consult factory
*** The AL- design includes monitored push rail**
**** The 59- design includes monitored push rail and latch**

Copyright © 1998-2025, SARGENT Manufacturing Company. All rights reserved. Reproduction in whole or in part without the express written permission of SARGENT Manufacturing Company is prohibited. Patent pending and/or patent www.assaabloydss.com/patents.

Security Shim Kit

EXIT DEVICE SECURITY SHIM KIT

The SARGENT 541 Exit Device Security Shim Kit fills the gap between the exit device and the glass creating a flush surface. This kit can be easily trimmed and installed to accommodate most door styles without removing the SARGENT push rail exit device.

This not only responds to the ever increasing need for improved building security, but also maintains the facility's aesthetic design.

FEATURES & BENEFITS:

- Nylon and brushed aluminum construction can be easily cut and trimmed for custom fit
- Fits all doors up to 48" wide and stiles ranging from 4-1/2" to 6"
- Adjustment shims accommodate gaps from 3/8" to 3/4"
- 6 Lobe tamper proof security screws are included
- A T10 Torx driver required for assembly
- Fasteners are countersunk for flush finish
- 541 Kit contains a 48" shim, ready to be sized

How to order:

- 541 Kit

Copyright © 1998-2025, SARGENT Manufacturing Company. All rights reserved. Reproduction in whole or in part without the express written permission of SARGENT Manufacturing Company is prohibited. Patent pending and/or patent www.assaabloydss.com/patents.

SARGuide™ Options (PL-) and Latch Bolt Monitoring Option (53-)

PL- PHOTOLUMINESCENT OPTION (NON-ELECTRIFIED)

SARGuide® PL Exit Device – with photoluminescent coating – is a non electrical option which produces visible EXIT signage in darkness or low lit areas.

- Approved for use in New York City in accordance with RS 6-1 and RS 6-1A
- Recharges from ambient light
- No wiring or maintenance needed
- Available for all door widths
- Order as a PL- option

(e.g., PL-8713F x ETMA x 32D x 36" x 84")

LiteGuide™

As part of their promise to provide innovative solutions to their customers, ASSA ABLOY Group companies offer the LiteGuide™ system, a luminescent egress marking system. LiteGuide™ installation is facilitated by ASSA ABLOY's ElectroLynx®, a universal quick-connect system that simplifies the electrification of the door.

LiteGuide™ is a trademark of ASSA ABLOY Inc.

53- LATCH BOLT MONITORING OPTION

The latch monitor provides tamper resistant latch monitoring, not just rail movement sensing. The monitor switch is activated when the rail is depressed or where there is movement of the latch.

- Switch type SPDT form "C" contacts
- 30 VDC@2 Amp. maximum rating
- All wires run through rail
- Field installation kits are not available
- Available for all door widths
- Adjustable switch bracket to fine tune sensitivity: set screw pivot bracket allows precise adjustment for more accurate notification of latchbolt movement (8500 and 8800 Series only).
- Available with all 80 Series Devices, except LP, LR, LS, FM8700
- 5lb. pressure released (5CH) option available.
- See page 74 for compatible options
- See McKINNEY's Transfer Device Solutions Catalog for QC Hinge and cable requirements
- Order as a 53- option
  (e.g., 53-8813F x ETJ x 32D x 36" Door)

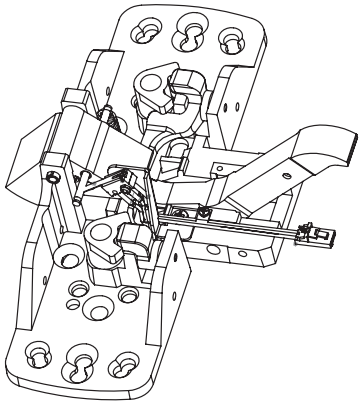

Copyright © 1998-2025, SARGENT Manufacturing Company. All rights reserved. Reproduction in whole or in part without the express written permission of SARGENT Manufacturing Company is prohibited. Patent pending and/or patent www.assaabloydss.com/patents.

SARGENT
ASSA ABLOY

Alarm Option (AL-)
Request-to-Exit Option (55-)

AL- ALARM OPTION

SARGENT's AL-80 Series Exit Devices are designed for areas requiring a stand-alone alarm on outward swinging doors. This device has an integrated alarm in the push rail to discourage the unauthorized use of emergency exit doors. The alarm inside the rail sounds immediately upon exit. The AL-80 Series is ideal for rear exterior doors, doors leading to a rooftop, or anywhere security is a concern.

FEATURES

- Microprocessor based alarm board
- When armed, alarm sounds immediately upon rail depression
- All exit devices have tamper resistant latching (Guarded Latch)
- Battery powered – 9VDC
- 103 Db @ 8 ft pulsating horn
- Flashing red LED provides visible violation indication, reset by key only
- Low battery alert
- Field selectable continuous alarm option- 9VDC 300mAh Supply and 546 Harness recommended
- Automatic re-arming option
- Supplied with a #41 (1-1/8") with standard off set cam
- UL Listed and cUL Listed
- UL Listed to Canadian Safety Standards
- Rail Monitoring & Guarded Latch are standard internal features
- Available with all 80 Devices, except LP, LR, LS8600, FM8700,WS & HC8800 Devices
- Minimum Door Widths:
  - Wide Stile Door : E-n/a; F-36" only; J-42"-39"; G-48"-43"
  - Narrow Stile Door: E-32" only; f-36"-34"; J-42"-37"; G-48"-43"
- See page 74 for compatible options
- See McKINNEY's Transfer Device Solutions Catalog for QC Hinge and cable requirements (if hard wired)
- Order as an AL- option (e.g., AL-8916F x ETJ x 32D x 36" Door)

545 ALARM RETROFIT KITS

Alarm retrofit kits available for the following 80 Series devices - 8300, MD8600, WD8600, GL-8800, and 8900 only. (GL-8800: Rim device with guarded latch)

Kit #	Device Style	Pivot to Pivot	Rail Size
545-1	Wide	11-1/4"	F
545-2	Narrow	11-1/4"	F
		8-1/2"	E
*545-3	Wide	20-1/2"	G
545-4	Narrow	20-1/2"	G
545-6	Narrow	14"	J
545-7	Wide	14"	J

*Note: #41 Cylinder is not supplied standard and must be ordered separately

546 WIRING HARNESS

Harness allows for remote control of the alarmed exit device

- Remote Alarm Reset–reset from remote location
- External Inhibit – shunts alarm from remote location
- Remote Power – allows unit to be wired to a 9VDC 300mAh power supply
- Remote Monitor – allows unit to be wired to remote console
- Order as:
  - 546 - Wiring Harness (For AL- option) - Mfg. prior to 7/1/04
  - 546-F - Wiring Harness for F-Size Rails - Mfg. after 7/1/04
  - 546-G - Wiring Harness for G-Size Rails - Mfg. after 7/1/04
  - 546-J - Wiring Harness for J-Size Rails - Mfg. after 7/1/04

55- REQUEST-TO-EXIT OPTION

SARGENT Request-to-Exit Signal Switch option for exit devices provides push rail monitoring for a variety of applications; such as to sound an alarm, initialize a delayed egress system, or de-energize an electromagnetic lock.

Switch type SPDT form "C" contacts

- 30 VDC@2 Amp. maximum rating
- All wires run through rail
- Available with all 80 Series devices, except for FM8700
- 5lb. pressure released (5CH) option available.
- See page 74 for compatible options
- Minimum Door Widths:
  - Wide Stile Door 24"
  - Narrow Stile Door 24"
- See McKINNEY's Transfer Device Solutions Catalog for QC Hinge and cable requirements
- Order as a 55- option (e.g., 55-8913F x ETMA x 32D x 36")

UNIVERSAL 855 RETROFIT KIT

- Retrofits existing 80 Series device installations with Request-to-Exit Signal Switch option
- Available for wide and narrow stile devices and 8895 Active Dummy Rail
- Compatible with all rail sizes (E, F, J, G), minimum rail length 26"
- Can not be used with 56- rails
- To order separately, order as 855

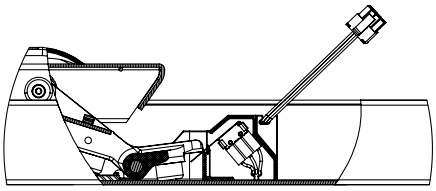

Copyright © 1998-2025, SARGENT Manufacturing Company. All rights reserved. Reproduction in whole or in part without the express written permission of SARGENT Manufacturing Company is prohibited. Patent pending and/or patent www.assaabloydss.com/patents.

Electric Latch Retraction Option (56-)

SARGENT
ASSA ABLOY

SARGENT's Electric Latch Retraction exit device is the perfect choice for high traffic egress doors that require access control. This non-handed exit device rail is durable and easy to install. It utilizes a latch retraction motor rather than a solenoid, ensuring quiet operation ideal for locations such as conference rooms, theaters and libraries. Once retracted, the door functions in a push/pull manner.

The 56- exit device can be dogged for momentary ingress and egress and is commonly used in conjunction with an automatic door operator. The device can be dogged continuously on fire-rated devices that are tied into the building's fire detection system.

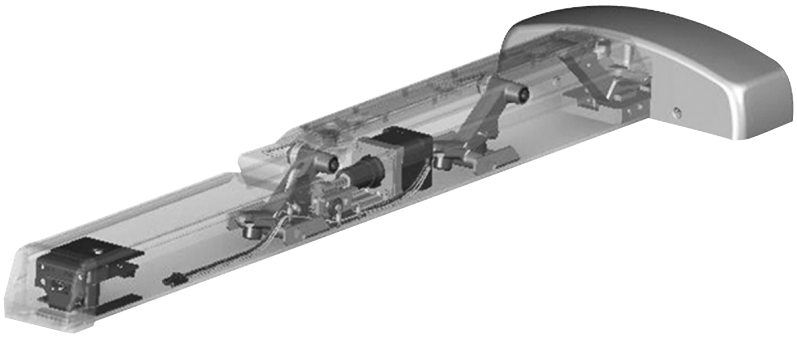

56- ELECTRIC LATCH RETRACTION FEATURES

- 5 year warranty
- Patent pending and/or patent www.assaabloydss.com/patents
- Field serviceable -modular design
- Motor driven latch retraction for smooth, precise operation
- Amount of rail retraction is automatically controlled by the 56- circuitry; System actively monitors its position and adjusts itself
- Digital retraction timer (0-20 seconds; factory setting is 5 seconds)
- Non-contact Request-to-Exit (55-) switch available
- Retrofit kits available - see next page
- Standard electric hinge - no special power transfer required
- Can be used for continuous and intermittent use
- UL Listed for Class II Circuitry
- 5lb. pressure released (5CH) option available.
- Power Requirements: 24VDC regulated/filtered power supply (LSP-12-24)
- Current draw: .6A during retraction and .25A maintained in dogged hold position
- Requires 1A at 24VDC regulated/filtered power supply
- Available for all 80 Series exit devices (except FM8700)
- See page 74 for compatible options
- Minimum Door Widths:
  - Wide Stile Door 28"
  - Narrow Stile Door 28"
- See McKINNEY's Transfer Device Solutions Catalog for QC Hinge and cable requirements
- Order as a 56- option
  (e.g., 56-HK-8913F x ETMF x 32D x 36")

Note: HK- and 16- are not available for Fire Rated Doors

Note: The 56- Option is not supplied with Manual Dogging (Hex Key or Cylinder Dogging) unless specified

OPTIONAL ACCESSORIES

- LSP-12-24 Power Supply
- 4370 Keyswitch
- 4291/4292 Keypad
- 3287 Door Status Switch
- Norton Automatic Door Operator
- Norton ADA Push Switch or Wave to Open Switch

Copyright © 1998-2025, SARGENT Manufacturing Company. All rights reserved. Reproduction in whole or in part without the express written permission of SARGENT Manufacturing Company is prohibited. Patent pending and/or patent www.assaabloydss.com/patents.

Electric Latch Retraction Motor Kits and Push Rail Kits

SARGENT
ASSA ABLOY

M56- Motor Retrofit Kits

The 56- Motor Retrofit Kits can only be added to 80 Series Exit Devices* manufactured after 2006 & P Series Exit Device

Upgradeable Design

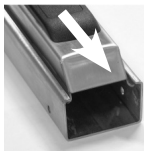

Exit Devices that are upgradable have straight push rail nose & tail; manufactured starting in 2007

Upgrade using R56 Kits only

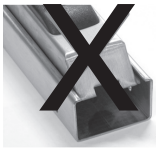

Exit Devices with a stepped Nose & Tail, produced prior to 2007, require the R56 Kits; the Push must be replaced

Rail Sizes

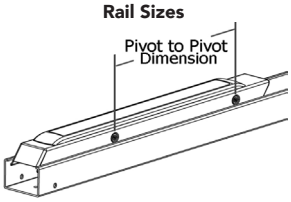

Rail Size is determined by the Pivot to Pivot Dimensions

56- Push Retrofit Kit Number	Type of Device to be Upgraded	Kits Description: 56- Motor Kits	Rail Sizes
M56A x Rail Size--	80 Series & P Series Exit Device*	Retrofits standard mechanical rail. Contains ribbon wiring.	8-1/2" = "E" Rail**
M56B x Rail Size	53-80 Series Exit Devices*	Retrofits 53- Exit Devices. Does not include 53- Signal Switch. Contains wiring to reconnect to the pre-existing 53- Chassis Signal Switch.	11-1/4" = "F" Rail**
			14" = "J" Rail
			20-1/2" = "G" Rail

* Except Exit Devices with a stepped Nose & Tail, produced prior to 2007 and all FM8700 Series Exit Devices
** Motor Retrofit Kits are identical for E and F size Rail Assemblies

- 55-M56 Kit: Request to Exit Signal Switch is integrated into the connecting arm within the rail
- 56- Motor Retrofit Kits can be used with 855 Request to Exit Kit or 816 Cylinder Dogging Kits
- Kits require a minimum insert length of 5" for 56- & 7" for 16-56- for the electronics
- Rail size is needed when ordering to supply the correct length wires

Option Available: 55- Non-Contact Request to Exit switch
How to Order: M56A (Kit #) x F (Rail Size)
Kit includes: Motor Bracket Assy, Motor Controller & Fasteners

R56- Retrofit Kits with Push Rail

The 56- Push Retrofit Kits can only be added to 80 Series* Exit Device manufactured after 1995

Upgradeable Design

Upgradable Exit Devices do not have Pivots in the Mtg Rails; manufactured starting in 1995

Mounting Rail Pivots

Devices with Mounting Rail Pivot Pins can Not be upgraded

Rail Sizes

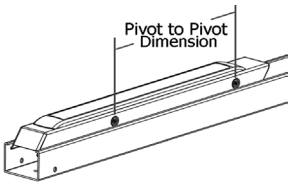

Rail Size is determined by the Pivot to Pivot Dimensions

56- Push Retrofit Kit Number	Type of Device to be Upgraded	Kit Descriptions: 56- Push Retrofit Kits	Rail Sizes
R56A x Rail Size & Finish	80 Series Exit Device*	Retrofits standard mechanical rail. Contains ribbon wiring.	8-1/2" = "E" Rail
R56B x Rail Size & Finish	53-80 Series Exit Devices*	Retrofits 53- Exit Devices. Does not include 53- Signal Switch. Contains wiring to reconnect to the pre-existing 53- Chassis Signal Switch.	11-1/4" = "F" Rail
			14" = "J" Rail
			20-1/2" = "G" Rail

* Except 80 Series Exit Devices produced prior to 1995 and all FM8700 Series Exit Devices
- Adding a R56 Kit to a 55- Rail, the 55- Switch will be eliminated.
- For 55-56- Rail Assemblies, use either a 55-R56 Kit or a R56 Kit with a 855 Kit
- R56A & R56B Kits can be used with 855 Request to Exit Kit or 816 Cylinder Dogging Kits
- Kits require a minimum insert length of 5" for 56- & 7" for 16-56- for the electronics

Options:
19- Push Rail less the Black Lexan Touch Pad
55- Non-Contact Request to Exit switch
HK- Hex Key Dogging to allow for manual dogging of the device
SG- MicroShield® antimicrobial clear powder coat (only available with 15, 26D and 32D finishes)

How to Order: R56A (Kit #) x F (Rail Size) x 32D (Finish);
Kit includes: Motor Bracket & Push Rail Assy, Motor Controller & Fasteners

Copyright © 1998-2025, SARGENT Manufacturing Company. All rights reserved. Reproduction in whole or in part without the express written permission of SARGENT Manufacturing Company is prohibited. Patent pending and/or patent www.assaabloydss.com/patents.

Electric Dogging Option (58-)

SARGENT
ASSA ABLOY

58- ELECTRIC DOGGING

Libraries, auditoriums, theaters, courtrooms, churches and schools benefit from the convenience of electric dogging (unlocking). When the 58-80 Series exit device is energized and the push rail is depressed, it will continuously hold the push rail down and the latch(es) will be held retracted.
When the device is de-energized or power is interrupted, the latch(es) will extend. This feature is ideal for areas that require the silent operation of exit device hardware.

58- FEATURES

- Provides quiet ingress and egress when dogged
- Standard electric hinge - no special power transfer required
- Manual hex key dogging provided on non-fire rated devices
- UL Listed for Panic and Fire (12-)
- Holding force 70 lbs. min.
- Power Requirements: 24VDC regulated/filtered power supply (LSP-12-24)
- Current draw: .2 amp
- Available for all 80 Series Devices, except FM8700 Devices
- See page 74 for compatible options
- Available for all door widths
- See McKINNEY's Transfer Device Solutions Catalog for QC Hinge and cable requirements
- Order as a 58- option (e.g., 58-8813F x ETJ x 32D x 36" Door)

OPTIONAL ACCESSORIES
- 4370 Key Switch
- 3287 Door Status Switch
- LSP-12-24 Power Supply

Copyright © 1998-2025, SARGENT Manufacturing Company. All rights reserved. Reproduction in whole or in part without the express written permission of SARGENT Manufacturing Company is prohibited. Patent pending and/or patent www.assaabloydss.com/patents.

ElectroGuard Delayed Egress Option (59-)

SARGENT
ASSA ABLOY

59- SELF CONTAINED DELAYED EGRESS DEVICE

Commonly used in schools, nursing homes, shopping centers and libraries, delayed egress exit devices provide a means of monitoring egress to prevent unauthorized exit. When the exit device push pad is depressed, the 59-80 Series delayed egress exit device sounds an alarm from the rail to alert personnel that someone is attempting egress. The exit device stays secure for fifteen seconds, allowing time for personnel to respond.

Momentary release for egress (adjustable for 5, 10, 20 or 40 seconds) is provided by a cylinder on the rail or from a remote location. When the fire alarm system is activated (if connected), the exit device disarms and allows immediate egress.

Note: As of February 2014, the 59- option has a new design. The updated 59- functionalities utilize new sensor technologies and is only available for order as a complete device. Component upgrades are not offered with prior generation products because wire harnesses are not backwards compatible. When replacing an existing device with an updated one, there is no change to door templating or mounting.

59- FEATURES

Compliance
- Conforms to NFPA 101 Special Locking Arrangements
- Available in UL Listed Panic and Fire Rated (12- option) devices
- UL294 Listed for Special Locking Arrangements
- When ordered with BC- option, complies with BOCA code relating to delayed egress. Requires door status switch (3287) ordered separately

Operation
- Depressing the push rail for one second or longer initiates an alarm
- LED visual notification system for easy identification of armed device; LED lights are field-selectable as red or green
- Momentary or maintained egress with key OR from a remote location
- Alarm disabled by key in the rail OR by remote reset
- Alarm sounds for fifteen seconds during unauthorized egress; after fifteen seconds lock releases. 30 second delay available with written permission of Authority having Jurisdiction
- Field adjustable nuisance delay (0 or 1 second)
- External inhibit features with authorized egress, card reader access and scheduled delayed egress from access control panel

Specifications
- Rod guards must be used on surface vertical rod devices. Consult factory for more information
- Standard size 41 mortise cylinder in rail
- Field adjustable momentary time delay preset for five seconds at factory
- 80dB horn enclosed in rail assembly
- Uses standard electric hinge - no special power transfer required
- Guarded & monitored latch and rail standard
- Power Requirements: 24VDC regulated/filtered power supply
- Key override capabilities
- Current draw: .2 amp. nominal, .5 amp (max) with optional features
- Minimum Door Widths:
  - Wide Stile Door 32"
  - Narrow Stile Door 32"
- Ability to gang up to 12 doors
- Shipped with decal “Emergency Exit Only. Push until alarm sounds. Door can be opened in 15 seconds”
- See McKINNEY’s Transfer Device Solutions Catalog for QC Hinge and cable requirements
- Available for all 80 Series devices, except LP, LR, LS, SP8600, FM, ND8700, MS, and HC8800 Devices
- Not compatible with 8700 SVR devices utilizing a 300 series Auxiliary Control
- Order as a 59- option (e.g., 59-8813F x ETJ x 32D x 36" Door)
- See page 74 for compatible options

Installation & Maintenance
- Diagnostic LEDs on PC board for easy troubleshooting

Copyright © 1998-2025, SARGENT Manufacturing Company. All rights reserved. Reproduction in whole or in part without the express written permission of SARGENT Manufacturing Company is prohibited. Patent pending and/or patent www.assaabloydss.com/patents.

Electrified and Monitored (54-) ET Trims and Power Supplies

SARGENT
ASSA ABLOY

ELECTRO-MECHANICAL ET LEVER HANDLE CONTROLS

EcoFlex® ET trim provides remote means of locking and unlocking of the lever. This trim operates from 12-24 VDC. Rim and Mortise Exit Devices are available with cylinder override. Cylinder override can be added to the other series with the use of a 100 or 300 series Auxiliary Control, except NB8700 devices.

73 & 74 FUNCTION ET TRIM

- Available for all 80 Series Exit Devices
- Requires a McKINNEY QC8 Hinge for EcoFlex® ET Trims and/or 54- option
- Features EcoFlex®
- Voltage: Operates from 12-24 VDC. (Voltage must be specified)
- Actuator Draw = 400mA inrush / 15mA continuous @ 12VDC / 24VDC
- Operating Temp.: Max. 151°F (66°C) Min -31°F (-35°C).
- Full wave rectification installed inside the ET Control
- UL and cUL listed for use on fire doors
- 5lb. pressure released (5CH) option available.
- Field reversible
- EcoFlex® Trim is specified by the product function
- 73 Function - Fail Safe - Lever is unlocked when power is off - no cylinder override
- 74 Function - Fail Secure - Lever is locked when power is off - no cylinder override
- Cylinder override available with the use of 100 or 300 Series Auxiliary Control, except NB8700 devices

Note: Repeated operation at voltage exceeding +/- 10% is not recommended

75 & 76 FUNCTION ET TRIM

- Available for all 80 Series Exit Devices
- Requires a McKINNEY QC8 Hinge for Ecoflex ET Trims and/or 54- option
- Features EcoFlex® technology
- Voltage: Operates from 12-24 VDC. (Voltage must be specified)
- Actuator Draw = 400mA inrush / 15mA continuous @ 12VDC / 24VDC
- Operating Temp.: Max. 151°F (66°C) Min -31°F (-35°C).
- Full wave rectification installed inside the ET Control
- UL and cUL listed for use on fire doors
- 5lb. pressure released (5CH) option available.
- Field reversible
- EcoFlex® Trim is specified by the product function
- 75 Function - Fail Safe - Lever is unlocked when power is off with cylinder override
- 76 Function - Fail Secure - Lever is locked when power is off with cylinder override
- Key retracts latch mechanically

Note: Repeated operation at voltage exceeding +/- 10% is not recommended

54- OPTION- LEVER MONITORING

- Available with all 80 Series exit devices x ET trim with these functions 06, 13, 15, 16, 73, 74, 75 & 76
- Requires a McKINNEY QC8 Hinge for 54- and/or EcoFlex® ET Trims
- Switch type SPDT form "C" contacts
- 30VDC @ 2 Amp. maximum rating
- Monitors lever rotation, can be incorporated into alarm systems or in conjunction with an electromagnet
- Must specify hand, non-reversible
- Not available with Freewheeling Trim

LSP-12-24 POWER SUPPLY

Operation
- LifeSafety Power supplies are designed to provide reliable filtered and regulated power for long life to a variety of electrified hardware components. Recommended for the 58-, 56-, 59- exit devices option and electric trim.

Features
- Selectable voltage output between 12V and 24V with a single switch
- Internal Back-Up battery charging circuit *
- Regulated and filtered, fuse protected outputs
- Each output can be individually turned on and off via a jumper
- Power status of each output is shown by an LED
- Rugged steel enclosure
- Fire alarm interface included – Dry contacts NO/NC, 9-33VDC, 3-15mA

Electrical Specifications
- Inputs: 120VAC
- Outputs: 12VDC @ 6 Amp or 24VDC @3 Amp
- 8 Total Outputs

Listings
- UL294, UL603, UL1076
- ULC S318, ULC S319

Applications
- 59- Delayed Egress
- 58- Electric Dogging
- EcoFlex® Electrified Trim
- 56- Motorized Electric Latch Retraction

* Note: Batteries are not included with the power supply

Model No.	Description
LSP-12-24 12V – 6AMP	24V – 3AMP Power Supply

Copyright © 1998-2025, SARGENT Manufacturing Company. All rights reserved. Reproduction in whole or in part without the express written permission of SARGENT Manufacturing Company is prohibited. Patent pending and/or patent www.assaabloydss.com/patents.

ET Trim, Levers and Pulls

SARGENT
ASSA ABLOY

ET LEVER CONTROLS

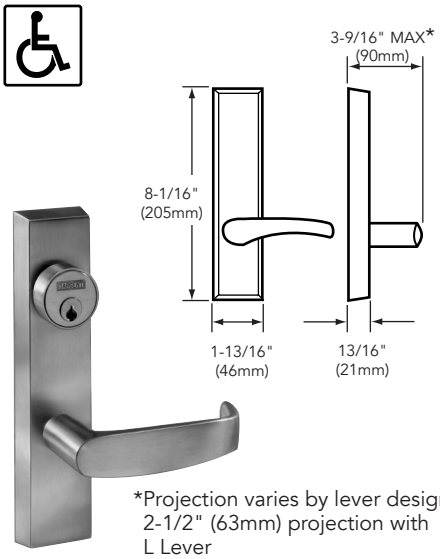

*Projection varies by lever design. 2-1/2" (63mm) projection with L Lever

Note: ET suffixes required when ordering ET trim without an exit device, see page 73 for complete details

A Lever

- Handed

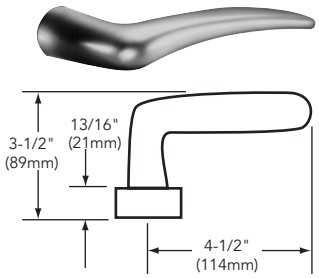

B Lever

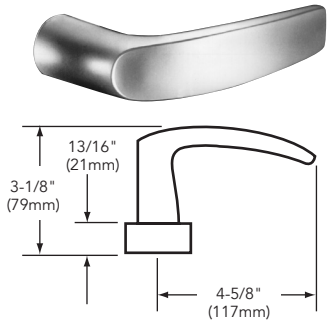

E Lever

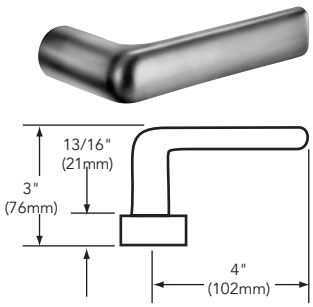

F Lever

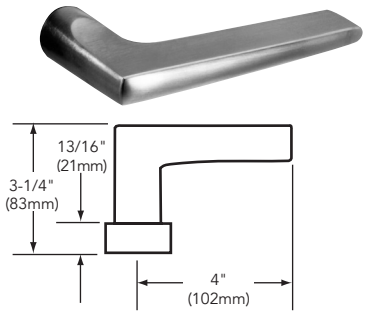

J Lever*

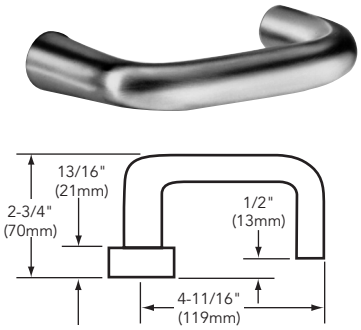

L Lever*

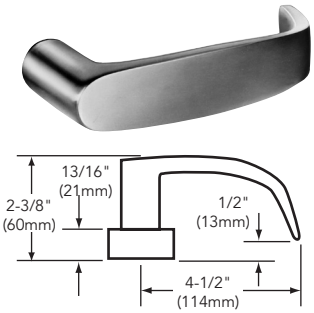

P Lever*

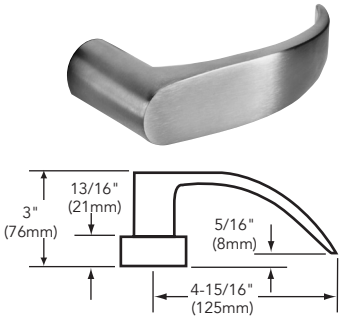

W Lever

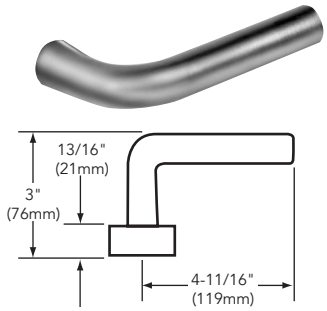

* Lever returns within 1/2" (13mm) of door face

PULLS

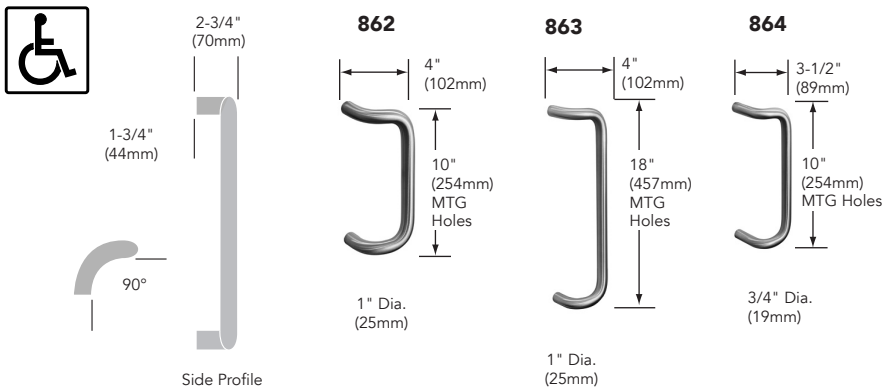

Copyright © 1998-2025, SARGENT Manufacturing Company. All rights reserved. Reproduction in whole or in part without the express written permission of SARGENT Manufacturing Company is prohibited. Patent pending and/or patent www.assaabloydss.com/patents.

SARGENT
ASSA ABLOY

Coastal Series Levers and Thumbpiece Pulls

- Coastal Series™ levers can be used with all SARGENT 80 Series exit devices with ET trim
- All levers – solid cast brass
- All standard functions available
- Finishes available: 03, 04, 09, 10, 10B, 10BE, 10BL, 14, 15, 20D, 26, 26D, BSP

R - Rockport™

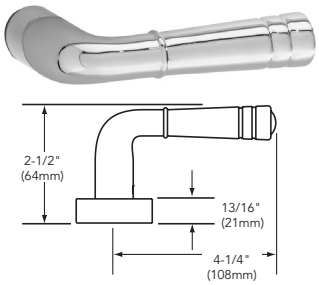

S - Sanibel™

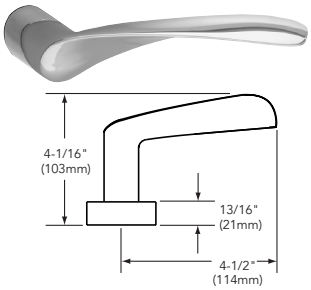

- Specify hand when ordering

Y - Yarmouth™

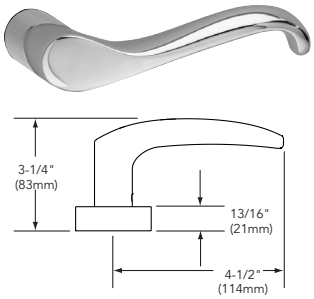

- Specify hand when ordering

G - Gulfport™

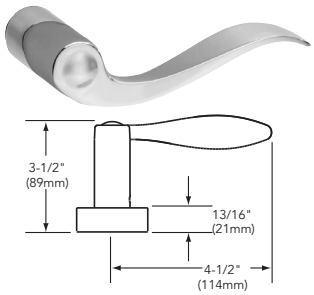

- Specify hand when ordering

PULLS AND THUMBPIECES TRIMS

These trims are through-bolted, creating perfect alignment of center case, thumbpiece and cylinder, as required. Through-bolts pass through the chassis of the devices and are bolted directly to the trim. FSL, FSW, MSL and PSB pulls are used with 12- 8804 and 8804 only, they are identical to FLL, FLW, MAL and PTB pulls except the cylinder hole is located 3/8" (9mm) lower. The 802-PTB plate is a flat plate which can be used to cover existing door preps and is as ANSI/BHMA function 01.

FLL/FSL

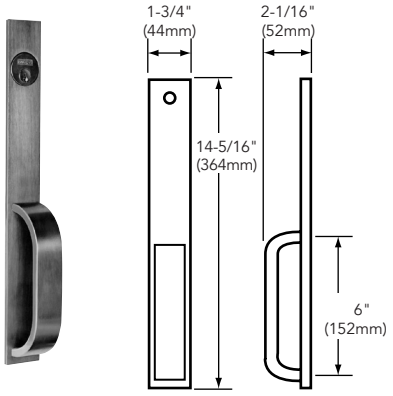

FLW/FSW

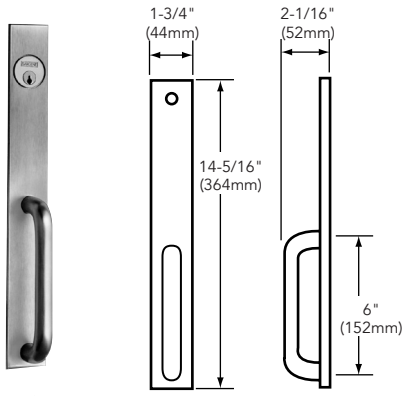

MAL/MSL

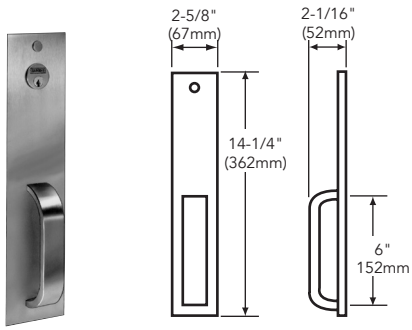

STS

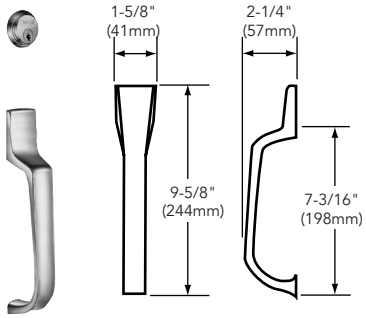

PTB/PSB

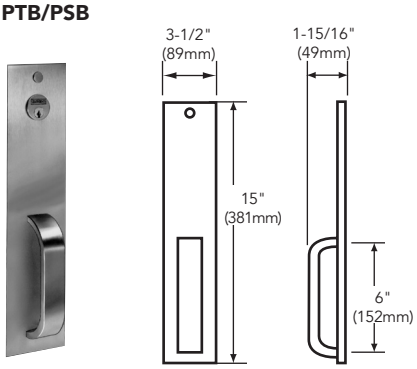

802-PTB

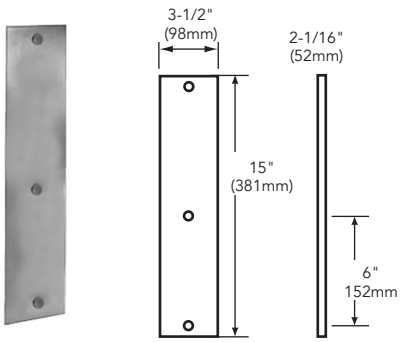

Copyright © 1998-2025, SARGENT Manufacturing Company. All rights reserved. Reproduction in whole or in part without the express written permission of SARGENT Manufacturing Company is prohibited. Patent pending and/or patent www.assaabloydss.com/patents.

Studio Collection Levers

SARGENT
ASSA ABLOY

Studio Collection trim is available in a broad array of designs and finishes. It allows for uniformity throughout a facility using the 8200, R8200 and 7900 Series Mortise Locks, Access Control Products, 80 Series Exit Devices, DL and RDL Series Tubular Locks.

All levers meet ADA compliance for national codes. Visit the online Decorative Hardware Product Selector at selector.sargentlock.com to mix and match styles and finishes.

Centro Series

MD

MJ

MP[2]

ND[1]

NJ[1]

Notting Hill Series
(MA & MO are Non-Handed Levers)

MA[2,3]

MQ[2]

MT[2]

MO[2,3]

MZ[1,2]

GT

Aventura Series

MB

ME

MF

NF[1]

MG

MI

MW[1]

[1] Lever returns within 1/2" (13mm) of door face
[2] Not available in 32D or 32 finish
[3] MA & MO are Non-Handed Levers)

Copyright © 1998-2025, SARGENT Manufacturing Company. All rights reserved. Reproduction in whole or in part without the express written permission of SARGENT Manufacturing Company is prohibited. Patent pending and/or patent www.assaabloydss.com/patents.

Studio Collection Levers

SARGENT
ASSA ABLOY

Odéon Series
(Handed Levers)

MN[4,5]

MH[4,5]

MS[4,5]

MU[4,5]

MV[4,5]

NU[1,4,5]

WG

Gramercy Series[2]

RCM[2]

RAL[2]

REM[2]

RAM[2]

RAS[2]

RAG[2]

RGM[2]

H015

H016[1]

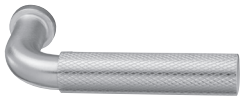
H017

H018

Wooster Square[3]

H001[3]

H002[3]

H003[3]

H004[3]

H005[1,3]

H006[1,3]

H007[2]

H008[2,5]

H011[2]

[1] Lever returns within 1/2" (13mm) of door face
[2] Gramercy levers are customized. See page 65 for ordering information
[3] H003-H006 - Contain white or black polycarbonate inserts. Not available with MicroShield® antimicrobial coating.
[4] Not available in 32 or 32D finish
[5] Handed Levers

Copyright © 1998-2025, SARGENT Manufacturing Company. All rights reserved. Reproduction in whole or in part without the express written permission of SARGENT Manufacturing Company is prohibited. Patent pending and/or patent www.assaabloydss.com/patents.

How to Order Gramercy Series Levers

SARGENT
ASSA ABLOY

GRAMERCY SERIES LEVERS

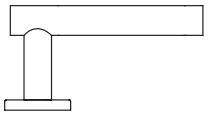

REM, RGM

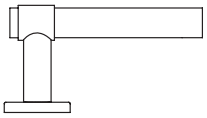

RCM

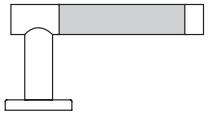

RAG, RAL, RAM**, RAS

GRAMERCY FINISH CODES

ANSI/BHMA Finish	SARGENT Finish	Gramercy Code*	Description
630	32D	30	Satin Stainless Steel
629	32	29	Bright Stainless Steel
613E	10BE	3E	Dark Oxidized Satin Bronze, Equivalent
N/A	BSP	BS	Black Suede Powder Coat
N/A	WSP	WS	White Suede Powder Coat
N/A	N/A	BK	Black (Santoprene™ or leather insert)
N/A	N/A	BN	Brown (leather insert)

*Code used to specify Gramercy Series finishes only. Use available finishes list to specify desired finish when ordering.

GRAMERCY LEVER DESCRIPTIONS & AVAILABLE FINISHES

Lever Designation	Lever Description	Available Finishes (AS ORDERED)
RAG	Grooved Insert	3030, 2929, 2930, 3029, 3E3E, BSBS or WSWS
RAL	Leather Insert	30BK, 30BN, 29BK, 29BN, 3EBK3E, BSBKBS, WSBKWS, 3EBN3E, BSBNBS or WSBNWS
RAM	Satin Metal Insert	2930** only (SEE NOTATION)
RAS	Santoprene Insert	30BK, 29BK, 3E3E, BSBS or WSWS
RCM	Raised Band	2930, 2929, 3030, 3029, 3E3E, BSBS or WSWS
REM	Plain	2929, 3030, 3E3E, BSBS or WSWS
RGM	Two Grooves	2929, 3030, 3E3E, BSBS or WSWS

**Notes for two-tone finishes:
- 2930 Finish: grip of lever is 32D, balance of lever is 32. Rose/escutcheon and lock finish will be 32.
- 3029 Finish: grip of lever is 32, balance of lever is 32D. Rose/escutcheon and lock finish will be 32D.

To order Gramercy Series levers with SARGENT products, see the examples below. When specifying finish, use the last two digits of the BHMA standard finish code, i.e. use "29" for polished stainless, BHMA finish 629

SAMPLE ORDER ON HOW TO SPECIFY AN EXIT DEVICE WITH GRAMERCY LEVERS

						Gramercy Lever information								
Options	Series	Function	Rail Size	Voltage	Trim	Lever	Finish			Hand	Inside Finish	Door Width	Opening Height	AFF
Select from 80 Series catalog				Specified for electrical functions	Select from 80 Series catalog	Leather insert	Bright stainless steel with brown leather			RHR RH, LHR, or LH	Select from 80 Series catalog		For vertical rod devices	Above Finished Floor
10-	87	73	F	12VDC	F	RAL	29	BN	29	RH	32D	36"	84"	41"

Copyright © 1998-2025, SARGENT Manufacturing Company. All rights reserved. Reproduction in whole or in part without the express written permission of SARGENT Manufacturing Company is prohibited. Patent pending and/or patent www.assaabloydss.com/patents.

SARGENT
ASSA ABLOY

Anti-Vandal Trim, 988 Surface Bolt, ET Plates and Dummy Rails

ANTI-VANDAL TRIM

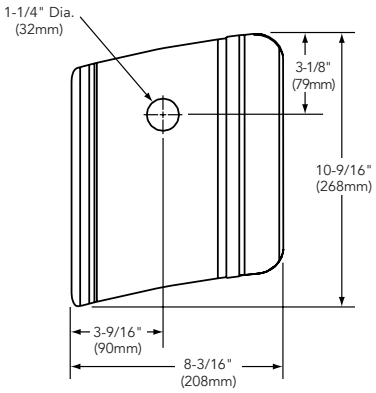

FEATURES

- Heavy duty 12 gauge stainless steel in 32D finish
- Through-bolted for added strength
- Handed – Specify RHR or LHR
- ADA Compliant
- #34 Rim Cylinder supplied for 8804
- #41 Mortise Cylinder supplied for 8904
- Night Latch and Dummy Functions available
- Available for MD & WD8610, 8710, 8804, 8810, 8904 & 8910 Devices
- Options not available with AV trim: 1-, 31, 49, 50, 68, 69, 76, 77, 85, 86, 87, DX & SG
- Without protective lip for inactive door
- AVT Retrofit Kit works easily with existing product with minor prep modification
- Order by part number (826, 824, 821 or 827) as determined by product & function below

Designed for exterior doors that require extra security or resistance to vandalism, anti-vandal trim (AVT) plates have an extended lip on the active side of the door to provide extra protection for the latchbolt. A matte plastic coated grip provides a comfortable pull over wide temperature ranges. Fully through-bolted with no exposed exterior fasteners for a cleaner look and increased security.

Part Number	Description	Application
826	Cylinder, but No Protective Lip	8804 Mfg after 02-2001
824	Protective Lip & Cylinder	8904; also 8804 Mfg before 02-2001
821	No Protective Lip & No Cylinder	MD & WD8610, 8710 and 8810
827	Protective Lip & No Cylinder	8910

821 for use on all inactive leafs

988 SURFACE BOLT KIT

- Designed for severe windload (Hurricane Code) environments where surface bolts are required (e.g., on inactive doors)
- Tested to Dade County protocols
- Listed to UL 10C for use on fire rated door assemblies. Refer to codes for locations where surface bolts are allowed on fire doors
- All steel construction for maximum strength and heavy duty use
  - Full 3/4" (19mm) square, 12" (305mm) bolt with 1-1/4" (32mm) throw
  - Bright zinc-plated finish
  - Jimmy-resistant design locks bolt automatically when thrown; released by pressing knob toward door while retracting
  - Bolt can be locked in retracted or thrown position
- Angle (L shaped) and mortise strike with mounting hardware supplied standard
- Order as a: 988 Surface Bolt

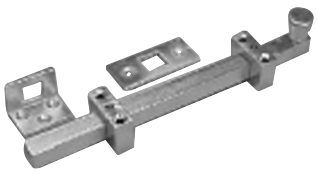

ET COVER PLATE

This plate is designed to be mounted behind the ET control to cover a stock hollow metal cutout

- Order as a: 68-0657 x finish

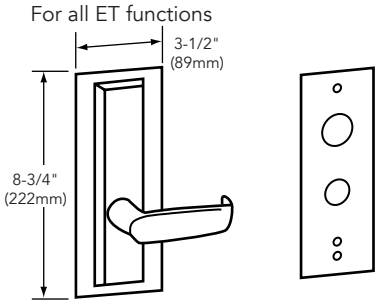

809 TOUCHPAD KIT

- Lexan touchpad replacement kit for all 80 Series push rails
- Direct replacement – uses existing mounting holes
- Order as a: 809 Touch Pad

8893 DUMMY RAIL

- A decorative push bar for vestibule door applications where continuity of design is desired, but no exit device is required. Outside dummy trim available on order.
- Order as a: 8893 x finish; Specify door width and door stile width when ordering.

8895 ACTIVE DUMMY RAIL

- Push rail operates on this rail to simulate active doors. Can be used with dummy trim.
- Order as a: 8885 x Finish; specify door width and door stile width when ordering.
- Available with Request-to-Exit (REX) signaling switch; specify 55-8895 x Finish

Copyright © 1998-2025, SARGENT Manufacturing Company. All rights reserved. Reproduction in whole or in part without the express written permission of SARGENT Manufacturing Company is prohibited. Patent pending and/or patent www.assaabloydss.com/patents.

Cylinder Information

SARGENT
ASSA ABLOY

THICKER DOORS SPECIFICATIONS

- Convenient for applications requiring durability, improved insulation, and resilience to heavy use.
- Door thicknesses above standard 1-3/4" available over 2.5" to 5" thick based on function limitation below:

Device with Trim

Device	Stile	Function	Door Thickness
RIM	Narrow	8504	Up to 2.5"
	Wide	8804	
		8816	
		8875	
		8876	
	Narrow	8506	Up to 5"
		8510	
		8513	
		8515	
		8573	
		8574	
	Wide	8806	
		8810	
		8813	
		8815	
		8873	
		8874	
SVR	Wide	8706	
		8710	
		8713	
		8715	
		8773	
		8774	

Note: Must specify 31- Option and Trim

How to order:
31- 8810 F NEL RHR 32D 5"

Device with Auxiliary Control

Exit Device	Stile	Trim Function	Aux Controls	Door Thickness
SVR	Wide	8710	306/P313	Up to 4.75"
		8773	306	
		8774		

Note: Must specify 31- Option and Auxiliary Control.

How to order:
31- 8710 306 F RHR 32D 84" 5"

Copyright © 1998-2025, SARGENT Manufacturing Company. All rights reserved. Reproduction in whole or in part without the express written permission of SARGENT Manufacturing Company is prohibited. Patent pending and/or patent www.assaabloydss.com/patents.

Mullions: Aluminum, Steel and Electrified

SARGENT
ASSA ABLOY

	Aluminum Mullions			Electrified
Product Designation	650A	980	L980	EL980
Description	Removable	Removable	Lockable	Electrical Lockable
Material	Aluminum	Aluminum	Aluminum	Steel
Standard Finish	US28/Satin Anodized Aluminum	Prime Coat	Aluminum Prime Coat	Gray Paint
Options	Specify "650A x 10B" for 313AN to match 10B	Specify "980A" for Anodized US28/ Satin Aluminum	Specify: "L980A" Anodized Aluminum Specify: "L980A x10B" for 313AN to match 10B	Wall Mounting Kit: 98-2580 Top Ret Pack :98-2558 Bottom Ret Pack: 98-2556
Stk Size	96"	86"	86"	86"
Max Stk Height	120"	120"	120"	120"
Pre-prepped	658 Strikes Included	No	No	No
Cylinder Size	Not Required	Not Required	#41	#46 Only
Shape	1-1/2" x 2-1/2"	T Shaped 2-1/2" x 3"	T Shaped 2-1/2" x 3"	Rectangular 2" x 3"
Misc. Information and Accessories	Includes 651 Stabilizers and imbedded Weather Stripping Top Retainer 94-2050 Bottom Retainer 94-2051	Top Retainer - 511 Bottom Retainer - 502 Adapter for narrow transom: 507 - Aluminum Prime Coated 507A - Anodized Aluminum	All Cylinder Options Available Wall Mount Kit 98-2578 Top Ret Pack 98-2526 Bottom Ret Pack 98-2525 Cylinder Kit 980C1*	For use with Electric Strikes and Monitoring, Quick Connect Wiring Supplied Cylinder Kit 980C2*

***Note:** Cylinder Kits must be ordered separately

	Steel Mullions				
Product Designations	HC980	980S	L980S	HCL980	12-HD980
Description	Hurricane Code	Standard Mullion	Lockable	Lockable Hurricane Code	Heavy Duty
Material	Steel	Steel	Steel	Steel	Steel
Fire Rated	Specify 12-HC980	Specify 12-980	Specify 12-L980	Specify 12-HCL980	Specify 12-HD980
Fire Rated Max Height	96"	96"	96"	96"	120"
Finish	Gray Paint	Gray Paint	Gray Paint	Gray Paint	Gray Paint
Stk Size	86"	86"	86"	86"	120"
Max Stk Height	96"	120"	120"	96"	120"
Pre-prepped	No	No	No	No	No
Cylinder Size	Not Required	Not Required	#41 Std (#42 & #43 available)	#41 Std (#42 & #43 available)	Not Required
Shape	Rectangular 2" x 3"	Rectangular 2" x 3"	Rectangular 2" x 3"	Rectangular 2" x 3"	Rectangular 2" x 3"
Misc. Information	Designed for severe wind load conditions due to hurricanes or windstorms. Tested to Dade County Protocols & ASTM Standards	For 12-8800 - Channel Iron & Malleable iron top & bottom retainers. Mullions longer than 86" must be ordered as 12- option x 120" length and cut to size in the field. Fire rating is valid only up to 96"	Fire rated for 8'0" x 8'0" paired openings Mullions longer than 86" must be ordered as 12- option x 120" length and cut to size in the field. Fire rating is valid only up to 96"	See Notes Below	12-HD980 is for pair of doors over 8'0" to 10'0" for use with 12-8800 Rim Exits includes two piece strikes
Accessories	Top Ret Pack - 98-2599 Bottom Ret Pack - 98-2600 Top Retainer Shim Kit - 601	Top Ret Pack - 98-2190 Bottom Ret Pack - 98-2191 Top Retainer Shim Kit - 601	Wall Mounting Kit - 98-2579 Top Ret Pack - 98-2559 Bottom Ret Pack - 98-2556 Top Retainer Shim Kit - 601 Cylinder Kit - 980C1*	Top Retainer Pack: 98-2593 Bottom Retainer Pack: 98-2594 Top Retainer Shim Kit - 601 Cylinder Kit - 980C1*	Top Ret Pack - 98-2599 Bottom Ret Pack - 98-2600 Top Retainer Shim Kit - 601

***Note:** Cylinder Kits must be ordered separately

Note for HC980/12-HC980 Mullions

- Designed for severe wind load conditions due to hurricanes or tornadoes
- Tested to Dade County protocols and ANSI 250.13 ASTM Standards and FEMA 361
- 12- Fire labeled version
- Replacement lock kits are available for lockable mullions Part numbers for each model are listed in the price book

HCL980 Mullion Information

- Model 12-HC-L980 may be supplied for doors UL fire rated up to and including 3 hrs not exceeding 8 ft in width and height
- Meets the following standards: ANSI 250.13, ASTM E330, ASTM 1886, ASTM 1996, TAS 201, TAS 202 & TAS 203
- Designed for use with UL Classified HC8810, HC8800 and 12-HC8800 rim exit devices

Copyright © 1998-2025, SARGENT Manufacturing Company. All rights reserved. Reproduction in whole or in part without the express written permission of SARGENT Manufacturing Company is prohibited. Patent pending and/or patent www.assaabloydss.com/patents.

Split Mullions

SARGENT
ASSA ABLOY

Split Mullions (Steel)			
Product Designations	SM980S	SML980S	SMEL980
Description	Standard Mullion	Lockable	Electrical Lockable
Material	Steel	Steel	Steel
Finish	Gray Paint	Gray Paint	Gray Paint
Stk Size	96"	96"	96"
Max Stk Height	96"	96"	96"
Pre-prepped	No	No	No
Cylinder Size	Not Required	#41 Std (#42 & #43 available)	#46 Only
Shape	Rectangular 2" x 3"	Rectangular 2" x 3"	Rectangular 2" x 3"
Misc. Information	Not fire rated	Not fire rated	Not fire rated
Accessories	Top Ret Pack - 98-2190 Bottom Ret Pack - 98-2191 Top Retainer Shim Kit - 601 Screw Pack - 98-2029	Wall Mounting Kit - 98-2579 Top Ret Pack - 98-2559 Bottom Ret Pack - 98-2556 Top Retainer Shim Kit - 601 Cylinder Kit - 980C1* Screw Pack - 98-2029	Top Ret Pack - 98-2558 Bottom Ret Pack - 98-2556 For use with Electric Strikes and Monitoring, Quick Connect Wiring Supplied Cylinder Kit - 980C2* Wall Mounting Kit: 98-2580 Screw Pack - 98-2029

***Note:** Cylinder Kits must be ordered separately

Copyright © 1998-2025, SARGENT Manufacturing Company. All rights reserved. Reproduction in whole or in part without the express written permission of SARGENT Manufacturing Company is prohibited. Patent pending and/or patent www.assaabloydss.com/patents.

Mullion Accessories and Stabilizers

SARGENT
ASSA ABLOY

Mullion Accessories
RK980
Latchbolt assembly retrofit kit with top and bottom retainers for 980 aluminum mullion.

507 Narrow Transom Bars Adapter
- Available with 980 and 980A
- Required when soffit is 1-1/4" (32mm) to 2" (51mm) wide
- Order as a: 507 for 980 mullion or 507A for 980A mullion

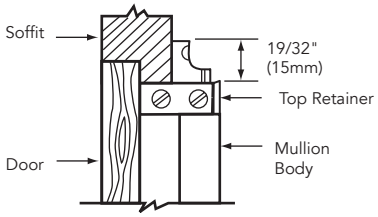

980S Mullion Application
- All steel mullions are 2" x 3"

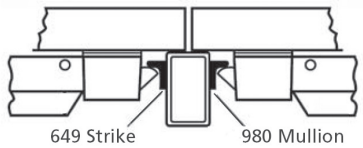

651 Mullion Stabilizer Kit
- Stabilizer block
- Furnished standard w/650A Mullion
- Order as a 651 Kit

650A Mullion

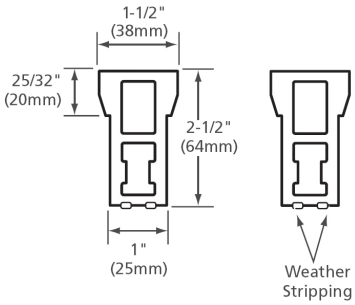

980 Mullion &
L980 Lockable Mullion

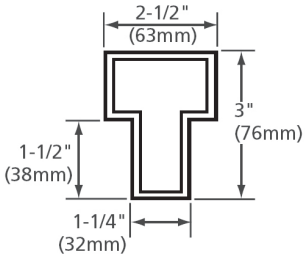

980C1 Cylinder Mullion Kit
- Lockable mullions only
- Aluminum and steel
- Includes cylinder and collar
- Available in 26D & 10B finish

Lockable Mullion

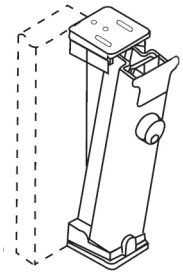

Lockable Mullion Cylinder Kit Options*
L980, L980A, L980S & HC-L980 mullions are available with these options:
10, 10-21-, 10-63-, 11-, 11-21-, 11-60, 11-63-, 11-64-, 11-72-7P-, 11-65-73-7P-, 11-73-7P-, 21-, 60-, 63-, 64-, 70, 72-, 73-, 65-73-, 65-73-7P-, 73-7P-, 81-, 82-, F1-82-, 83-, F1-83-, 84-, SC- & SE-.

EL980 mullion is available with these options:
10, 10-21-, 10-63-, 11-, 11-21-, 11-60, 11-63-, 11-64-, 11-72-7P-, 11-65-73-7P-, 11-73-7P-, 21-, 60-, 63-, 64-, 70, 72-, 73-, 65-73-, 65-73-7P-, 73-7P-, 81-, 82- & F1-82-.
*Lockable mullions are shipped without cylinders. Order Cylinder Mullion Kit separately.

980C2 Cylinder Mullion Kit
- Lockable mullions
- Electrified only
- Includes cylinder and collar
- Available in 26D finish only

Mullion Weights & Packaging

Product	Avg Wt	Case
Exit Device with Trim	15 lbs	1 ea
980 Mullion	18 lbs	1 ea
12-980 Mullion	40 lbs	1 ea
650A Mullion	18 lbs	1 ea
SM980S Split Mullion	40 lbs	1 ea

Copyright © 1998-2025, SARGENT Manufacturing Company. All rights reserved. Reproduction in whole or in part without the express written permission of SARGENT Manufacturing Company is prohibited. Patent pending and/or patent www.assaabloydss.com/patents.

Through-bolt Kits, Rod Extensions and Shim Kits

SARGENT
ASSA ABLOY

Through-bolt (TB) Applications

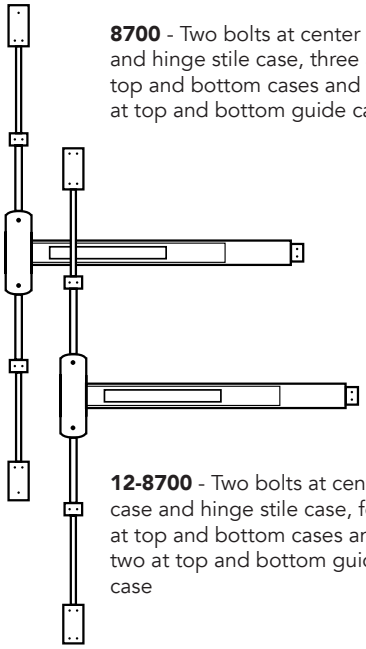

8700 - Two bolts at center case and hinge stile case, three at top and bottom cases and two at top and bottom guide cases

12-8700 - Two bolts at center case and hinge stile case, four at top and bottom cases and two at top and bottom guide case

Through-bolts		Qty	Part #
8700	Rail & Chassis	4	68-2279
8700	Cases & Guides	10	68-2282
12-8700	Complete	16	68-2288
8800	Rail & Chassis	4	68-2279

To order through-bolts with device:

Example: 8804 FLL x TB

Note: Attaching Screws – All series are furnished standard with wood screws for wood and Kalamein doors and machine screws for metal doors. Through-bolts and mortise nuts must be specified to mount fire exit devices on composite fire doors with steel, wood or plastic covering

565 Metal End Cap Kit

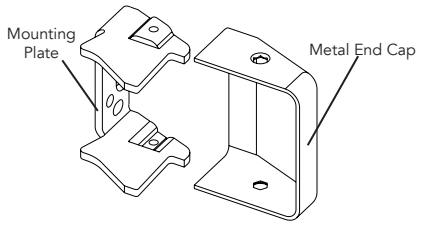

End cap with hardware finish includes mounting plate with wood and machine screws

Order as a 565 Kit x Finish

Rod Extension Kits

- For surface mounted top rod extensions
- 570 Kit is for a Rod Connector & spiral pin
- 571 Kits includes top rod extension & 570 kit for device mfg prior to November 2002
- Specify Kits and finish:
  - 571-6 for 6" Rod Extension
  - 571-12 for 12" Rod Extension
  - 571-18 for 18" Rod Extension
  - 687 Kits include Rod Extension for devices mfg after November 2002
- Specify Kits and finish:
- 687-6 for 6" Rod Extension
- 687-12 for 12" Rod Extension

Note: For extensions over 12" full rod lengths are available, see Rod Replacement Kits Below

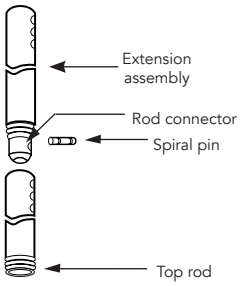

Rod & Bolt Replacement Kits

Product	Top Rod & Bolt Kit *	Bottom Rod & Bolt Kit **
8700	N/A	N/A
MD & AD8600	MD691T	691B
WD8600	WD691T	691B
WD8600 x Aux	WDA691T	691B
MD & AD8400	MD691T	691B
LP/LR/LS8600	692L	N/A

* Door Height & Rail Location Required
** Rail Location Required

Glass Bead Shim Kits

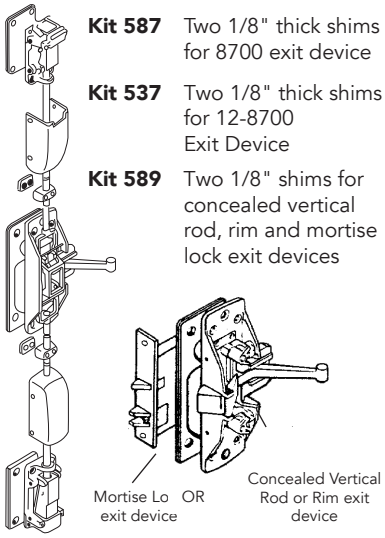

Kit 587 Two 1/8" thick shims for 8700 exit device

Kit 537 Two 1/8" thick shims for 12-8700 Exit Device

Kit 589 Two 1/8" shims for concealed vertical rod, rim and mortise lock exit devices

Note:

- Lift slide length must be increased for 8600 and 12-8600
- Lift lever length must be increased for 8900 and 12-8900
- Shim thickness must not exceed 1/4" (6mm) on 8900 and 12-8900
- Spindles and through-bolt lengths must be increased on 8700, 12-8700, 8800, 12-8800 exits
- Kits are available in EB, ED, and EN

Rod Replacement Kits

Product	Top Rod Kit ++	Bottom Rod Kit +++
All 8700+	670T	670B
MD & AD8600	MD660T	660B
WD8600	WD660T	660B
WD8600 x Aux	WDA660T	660B
MD & AD8400	MD660T	660B
LP/LR/LS8600	661L	N/A

\+ Finish Information Required
++ Door Height & Rail Location Required
+++ Rail Location Required

Copyright © 1998-2025, SARGENT Manufacturing Company. All rights reserved. Reproduction in whole or in part without the express written permission of SARGENT Manufacturing Company is prohibited. Patent pending and/or patent www.assaabloydss.com/patents.

End Caps and Cylinder Dogging Kits

CYLINDER DOGGING 16- OPTION

A 41 mortise cylinder (included), located in the rail insert, locks the rail in retracted position. Available for all 80 Series devices except Fire Rated, FM8700 & some electrical options.

Order as a 16- option with the device

Example: 16-8813F x ETJ x 03 Finish

Also available as a 816 Kit

Specify Kit based on Rail size

Example:
816-1 x finish for “F” wide
816-2 x finish for “E” & “F” narrow
816-3 x finish for “G” wide
816-4 x finish for “G” narrow
816-5 x finish for “E” wide
816-6 x finish for “J” narrow
816-7 x finish for “J” wide
816-8 x finish for “E” narrow

Cylinder included

Note: Cylinder dogging requires a 27" minimum door width

CYLINDER NUT WRENCH

This wrench simplifies the installation and removal of mortise cylinders nuts used on 700 Series Auxiliary Control (80 Series ET Trim).

- Part number 97-0568

665 FLUSH END CAP KIT AND 553 SHIM KIT

- 665 Kit is Flush End Cap for 80 Series exit device
- 665 Kit available for retrofit/replacement
- To order specify 665 Kit x Finish or with the Device as a 43- option
- 553 Kit is an 1/8” Shim for Flush End Caps
- 553 Shim Kit is only available in ED, EN & EB*
- To order specify 553 Kit x Finish

* **Note: EB** (BHMA 690) Powder coated to match 10B **EN** (BHMA 689) Powder coated to match 26D

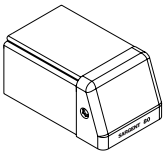

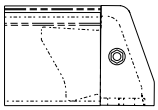

Copyright © 1998-2025, SARGENT Manufacturing Company. All rights reserved. Reproduction in whole or in part without the express written permission of SARGENT Manufacturing Company is prohibited. Patent pending and/or patent www.assaabloydss.com/patents.

Rail Sizes and How to Order ET Trim

SARGENT
ASSA ABLOY

COVER DIMENSIONS AND TOUCHBAR PROJECTIONS

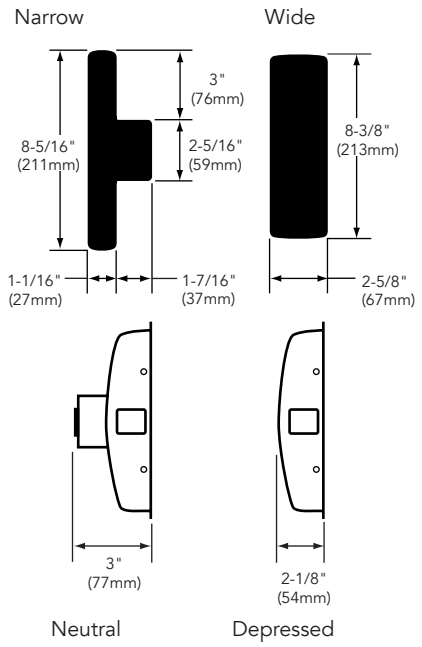

RAIL SIZES

SARGENT offers four sizes of rails to accommodate 32", 36", 42" and 48" doors. These rails can be cut for smaller doors as specified in the chart below.

SARGENT will cut all rails to size if door width is specified when the hardware is ordered.

Stock Size	Door Widths	Remarks
E	24" to 32" (61cm to 81cm)	No cutting required for 32" (81cm) door
F	33" to 36" (84cm to 91cm)	No cutting required for 36" (91cm) door
J	37" to 42" (94cm to 107cm)	No cutting required for 42" (107cm) door
G	43" to 48" (110cm to 122cm)	No cutting required for 48" (122cm) door

LP, LR & LS8600 Rail Sizes

L Rail	36" (91cm)	No cutting required
M Rail	42" to 44" (107cm to 112cm)	No cutting required
N Rail	46" to 48" (117cm to 122cm	No cutting required

HOW TO SPECIFY AND ORDER ET TRIM WITHOUT AN EXIT DEVICE

Example for 775-8 ETL 26D RHR 12VDC

7	75	-8	ETL	26D	RHR	12VDC
7 For 700 series auxiliary control	2 Digit function number	Suffix - determined by exit device (see chart)	Et followed by lever design pages 61-64	Finish Page 83	Hand Page 78	Voltage for et trims Page 60

Notes:
- LFIC (Removable) and SFIC (70-) option cylinders require 97-0351 cylinder rings for 700 Series ET Controls and 94-0153 rings for 100 & 300 Series Aux controls.
- When ordering 775 or 776 trim, specify either a rim cylinder or mortise cylinder.

No Suffix	-8 Suffix
Square Spindle or No Spindle for inactive functions	Cross Type Spindle
for all 8900, 8300, 8700 with bottom rod and 8800, 8500, NB8700 devices with these functions: 04, 10, 16, 40 & 44	for 8800, 8500, NB8700 devices, except with these functions: 04, 10, 16, 40 & 44

-4 Suffix	-6 Suffix
Offset Mtg Tabs Top & Bottom	Offset Mtg Tab Top Only
for all AD & MD8400 and AD, WD & MD 8600 devices	for all LP, LR & LS 8600 devices

730 Spindle Retrofit Kits are used to replace existing spindles for 06, 13, 15, 16, 73, 74, 75 & 76 function ET Trims

Kits include Spindle, Retainer Plates, Mounting. Screws & Return Springs

730-1	700 Series Spindle 1-3/4" Door
730-2	700 Series Spindle 2" Door
730-3	700 Series Spindle 2-1/4" Door
730-4	700-4 Series Spindle 1-3/4" Door
730-5	700-4 Series Spindle 2" Door
730-6	700-4 Series Spindle 2-1/4" Door
730-7	700-8 Series Spindle 1-3/4" Door
730-8	700-8 Series Spindle 2" Door
730-9	700-8 Series Spindle 2-1/4" Door

Copyright © 1998-2025, SARGENT Manufacturing Company. All rights reserved. Reproduction in whole or in part without the express written permission of SARGENT Manufacturing Company is prohibited. Patent pending and/or patent www.assaabloydss.com/patents.

Mechanical Options and Descriptions

SARGENT
ASSA ABLOY

MECHANICAL OPTIONS:

Categories	How to Specify	Detailed Description
Fire Rated	**12-**	UL Fire Label Exit hardware (not available with 16- & HK-)
SVR Bolt	**14-**	Sliding bolt bottom case for 8700
Cylinder Dogging	**16-**	Cylinder lockdown with # 41 Cylinder & # 97 Ring (not available with 12-, 59- or AL- Option)
	LD-	Less dogging for non fire rated devices
Less Touch Pad	**19-**	Pushbar without Lexan touchpad
8900/8300 Strike	**23-**	4-7/8" (124mm) ANSI flat lip strike (for 8900 & 8300 Series Mortise Lock Exit Devices)
Thick Doors	**31-**	Doors over 1-3/4" and/or Panels (Specify door thickness, panel thickness & location as required.) Not available for HC8700, FM8700. Extended lip strike supplied for 8300 & 8900 Series.
Security Fasteners	**36-**	Six lobe security head screws
	37-	Spanner head screws
Flush End cap	**43-**	Flush End Cap (Not available with LP, LR & LS Devices)
Indicator	**49-**	Indicator (Available on 8816 and 8866 functions only)
Electrical Options	**53-**	Latchbolt monitoring switch (not available with 49-, 59-, GL-, HC-, WS- or on FM8700, LP/LR/LS8600 Exit Devices)
	54-	Monitors ET Lever movement with Internal micro switch in ET Control
	55-	Request to Exit - Signal Switch in Rail (not available with 59- & FM8700)
	56-	Remote Latch Retraction (not available 58-, 59-, AL-, BT- or FM8700 Option)
	56-HK-	Remote Latch Retraction with manual Hex Key dogging (not available 12-, 58-, 59-, AL- or BT- Option)
	58-	Electric Rail Dogging (Not available 56- & 59-)
	59-	Electroguard® Self Contained Delayed Egress Device (not available with 16-, 53-, 55-, 56-, 58-, AL-, BT-, GL-, HC- & WS Option Prefixes, LP/LR/LS8600 Exit Devices) (NB, 54- are available upon request) Not compatible with 300 Series Aux Controls on NB8700, 8700.
	AL-	Alarmed Exit (Not available 16-, 56-, 59-, BT-, GL-, HC- , HC4 & WS-) (minimum Dr width 36")
	BC-59-	Electroguard® Boca Code (Door Status Switch required) (not available with 16-, 55-, 56-, 58-, AL-, BT-, GL-, HC- & WS- Options and on NB8700 & LP/LR/LS8600 Exit Devices) Not compatible with 300 Series Aux Controls on NB8700, 8700.
Tactile Warning Options	**76-**	Tactile Warning - Milled Outside Lever (not available with Studio & Coastal Levers and the A Lever)
	85-	Tactile Warning - Abrasive strip on Push Rail (Not available with PL-)
	86-	Tactile Warning - Abrasive coating on Outside Lever
	87-	Tactile Warning - Abrasive strip on Push Rail & Abrasive coating on Outside Lever (not available with PL-)
Finish Protection	**CPC-**	Clear Powder Coat (Available for 32 & 32D Finishes)
	SG-	MicroShield® antimicrobial clear powder coat (only available with 15, 26D and 32D finishes)
Top Rod Only	**NB-**	Less Bottom Rod & Bolt (for SVR & CVR Devices)
Guarded Latch	**GL-**	Guarded Latch for Rim Exit Devices (not available 53-, 59-, AL-, HC- & WS-)
SARGuide	**PL-**	SARGuide™ PL – Photoluminescent Coated Push Rail – (Touchpad eliminated) (not available 85, 87)
Through Bolts	**TB-**	Through Bolts for 8300, 8500, 8600, 8700, 8800 & 8900 Devices
Rail Force	**5CH-**	5lb. Pressure Release (8800, 8500, 8600 & 8400 devices only) Not available with 14-, 49-, 58-, 59-, BC-59, TI- Consult Factory: 23-, 31-, 36-, 37-, 43-, 54-, 55-, 56-HK, AL-, 76-, 87-, CPC-, SG-, NB-, GL-, TB
Weather Resistant	**WH-**	Weep Holes (8500 and 8800 devices only) (Not available with AL-, 56-, 58-, 59-, HC-, WS-, BC-, HC4-, TL- & PL-) (Only available with 03, 04, 09, 10, 10BL, 20D, 10BE, BSP, WSP & 32DCP Finishes)

Copyright © 1998-2025, SARGENT Manufacturing Company. All rights reserved. Reproduction in whole or in part without the express written permission of SARGENT Manufacturing Company is prohibited. Patent pending and/or patent www.assaabloydss.com/patents.

Cylinder Options and Descriptions

SARGENT
ASSA ABLOY

CYLINDER OPTIONS:

Conventional Cylinder	-	SARGENT Conventional Cylinders Supplied Standard (Unless Otherwise Specified)
Degree Key System	**DG1-**	SARGENT Degree Key System Level 1 (bump resistant with patented keys)
	DG1-21-	Degree Level 1 Construction Master Keying
	DG1-60-	Degree Level 1 Removable Disposable Construction Core
	DG1-63-	Degree Level 1 Removable Core
	DG1-64-	Degree Level 1 Removable Construction Keyed LFIC
	DG1-65-	Degree Level 1 Unassembled/Uncombined Core
	DG2-	SARGENT Degree Key System Level 2 (geographically exclusive; bump and pick resistant)
	DG2-21-	Degree Level 2 Construction Master Keying
	DG2-60-	Degree Level 2 Removable Disposable Construction Core
	DG2-63-	Degree Level 2 Removable Core
	DG2-64-	Degree Level 2 Removable Construction Keyed LFIC
	DG2-65-	Degree Level 2 Unassembled/Uncombined Core
	DG3-	SARGENT Degree Key System Level 3 (geographically exclusive; UL437 certified; bump and pick resistant)
	DG3-21-	Degree Level 3 Construction Master Keying
	DG3-60-	Degree Level 3 Removable Disposable Construction Core
	DG3-63-	Degree Level 3 Removable Core
	DG3-64-	Degree Level 3 Removable Construction Keyed LFIC
	DG3-65	Degree Level 3 Unassembled/Uncombined Core
Signature Key System	**10-**	SARGENT Signature Key System (Not Available with other Key Systems)
	10-21-	SARGENT Signature Construction Key System (Lost Ball)
Signature- LFIC	**10-63-**	SARGENT Signature Large Format Interchangeable Core Cylinder (Removable)
XC- Key System	**11-**	XC Key System (Not available with other Key systems unless specified)
	11-21-	XC- Construction Key System (Lost Ball)
XC- Large Format Interchangeable Core (Removable Core)	**11-60-**	Device to accept XC- Permanent Large Format Interchangeable Core, Disposable plastic Core- provided
	11-63-	Device provided with XC- Large Format Interchangeable Core Cylinder - (Includes masterkeying, grand masterkeying)
	11-64-	Device provided with Keyed construction core to accept XC- Permanent Large Format Interchangeable Core (ordered separately)
XC- Small Format Interchangeable Core	**11-70-7P-**	Device to accept XC- SFIC (7-Pin) XC- Permanent Cores, plastic disposable core provided
	11-72-7P-	Device to accept XC- SFIC (7-Pin Keyed Construction Core provided) cylinder Permanent core ordered separately
	11-73-7P-	Device provided with XC- Small Format 7-Pin interchangeable core (Includes masterkeying, grand masterkeying)
	11-65-73-7P-	Device provided to accept XC- Uncombinated 7-Pin SFIC (Permanent) Core - (Packed Loose)
Construction Key Systems	**21-**	SARGENT Lost Ball Construction Keying for Conventional, XC and Signature Series (N/A with 63- or 73-)
Old Style Removable Core	**51-**	Removable Core Cylinder (Old Style) provided (existing systems only)
	52-	Removable Construction Core (Old Style) Permanent core ordered separately (existing systems only)
Large Format Interchangeable Core (Removable Core)	**60-**	Device to accept SARGENT Permanent Large Format Interchangeable Core, Disposable plastic Core provided (Permanent Cores ordered separately)
	63-	Device provided with Large Format Interchangeable Core Cylinder - (Includes masterkeying, grand masterkeying)
	64-	Device provided with Keyed construction core to accept Permanent Large Format Interchangeable Core (ordered separately)
Small Format Interchangeable Core	**70-**	Device to accept 6- or 7-Pin SFIC Permanent Cores, plastic disposable core provided
	72-	Device to accept 6- or 7-Pin SFIC (6-Pin Keyed Construction Core provided) Cylinder (Permanent Core ordered separately)
	73-	Device provided with 6-Pin SFIC (Includes masterkeying, grand masterkeying)
	65-73-	Device provided to accept Uncombinated 6-Pin SFIC (Permanent) Core - (Packed Loose for field keying)
	65-73-7P-	Device provided to accept Uncombinated 7-Pin SFIC (Permanent) Core - (Packed Loose for field keying)
	73-7P-	Device provided with Small Format 7-Pin Interchangeable Core (Includes masterkeying, grand masterkeying)
Keso & Keso F1	**81-**	Device provided with housings to accept Keso (83) & Keso F1 (F1-83-) removable cores. (Permanent Cores ordered separately)
	82-	Device provided with SARGENT Keso Security Cylinder
	F1-82-	Device provided with SARGENT Keso F1 Security Cylinder (Patented)
	83-	Device provided with SARGENT Keso Security Removable Core cylinder
	F1-83-	Device provided with SARGENT Keso F1 Security Removable Core cylinder (Patented)
	84-	Device provided with SARGENT Keso Construction Cores (Permanent Cores ordered separately)
Added Security	**BR-**	Bump Resistant Cylinder (Available with Conventional & Conventional XC Cylinders Only)
Less Cylinder	**LC-**	Less Cylinder - SARGENT supplies standard blocking rings for 1-1/8" Cylinders (For longer cylinders order collars/rings separately)
Schlage Keyways	**SC-**	Schlage C keyway cylinder, 0 bitted (not available with: 8904, 8916, 8944, 8975, 8976, 8866, 8304, 8344, 8375 & 8376)
	SE-	Schlage E keyway cylinder, 0 bitted (not available with: 8904, 8916, 8944, 8975, 8976, 8866, 8304, 8344, 8375 & 8376)
Lever to Accept Schlage	**SF-**	L Lever to accept Schlage® large format interchangable core (supplied less core, tailpiece included)

Note: For V-10 Cylinders and information, contact ASSA

Copyright © 1998-2025, SARGENT Manufacturing Company. All rights reserved. Reproduction in whole or in part without the express written permission of SARGENT Manufacturing Company is prohibited. Patent pending and/or patent www.assaabloydss.com/patents.

How to Order

SARGENT
ASSA ABLOY

HOW TO ORDER EXIT DEVICES

Example Order:

12-	89	75	F	ETMD	12VDC	RHR	26D	32D	36"	84"	41"
Options	**Device Type**	**Function**	**Rail Size**	**Trim**	**Voltage**	**Hand**	**Outside Finish**	**Inside Finish**	**Door Width**	**Opening Height**	**AFF**
Available Options Listing Pgs 73-74	89 - Mortise WS89 - Mortise 88 - Rim HC88 - Rim WS88 - Rim 87 - SVR NB87 - SVR HC87 - SVR FM87 - SVR MD86 - CVR AD86 - CVR WD86 - CVR 85 - Rim Narrow MD84 - CVR Narrow AD84 - CVR Narrow 83 - Mortise Narrow LP86 - CTL CVR LR86 - CTL CVR LS86 - CTL CVR	04 - Night Latch 06 - Night Latch 10 - Dummy 13 - Classroom 15 - Passage 16 - Entrance 28 - TP Passage 40 - FW Dummy 43 - FW Classroom 44 - FW Night Latch 46 - FW Night Latch 62 - TP Night Latch 63 - TP Classroom 66 - TP Entrance 73 - Solenoid Fail Safe 74 - Solenoid Fail Secure 75 - Solenoid Fail Safe w/Cyl 76 - Solenoid Fail Secure w/Cyl	E 24"-32" F 33"-36" J 37"-42" G 43"-48" Rail Sizes Listed Below are for LP, LR & LS Devices Only L 36" Door M 42"-44" N 46"-48"	For ET trim specify ET followed by Lever design, See pages 60-62 For Thumbpiece Trims and Pulls specify Trim Designation as specified by Device Type	12VDC 24V0DC Voltage required for Solenoid Controlled Functions - 73, 74, 75 & 76	RHR LHR	Available Finishes page 75	Inside Finish Available Finishes page 75	If door width is supplied rails will be cut to size	Required for Vertical Rod Exit Devices	Center Line of Rail Above Finish Floor 41" Standard

LEGEND

AD - Aluminum Door
AFF - Above Finish Floor
CTL - Center & Top Latching Exit
CVR - Concealed Vertical Rod
ET - SARGENT External Lever Trim
FM - FEMA
FW - Freewheeling Trim
HC - Hurricane Code
MD - Metal Door
NB - No Bottom Rod
SVR - Surface Vertical Rod
TP - Thumbpiece Trim
WD - Wood Door
WS - Windstorm

MOUNTING HEIGHTS

- 41" (1041mm) from finished floor for standard application
- 38" (965mm) from finished floor for elementary schools and to meet local accessibility standards when a 100 or 300 Series Auxiliary Control is used (38" AFF must be specified)

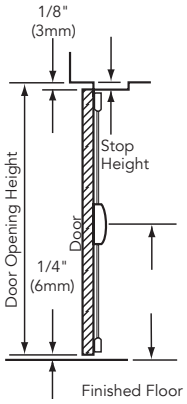

HAND

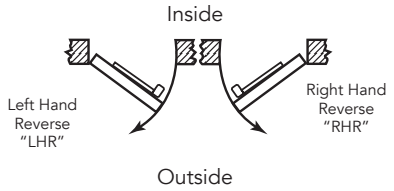

Copyright © 1998-2025, SARGENT Manufacturing Company. All rights reserved. Reproduction in whole or in part without the express written permission of SARGENT Manufacturing Company is prohibited. Patent pending and/or patent www.assaabloydss.com/patents.

Finishes and Finish Care

SARGENT
ASSA ABLOY

FINISH

SARGENT#	BHMA#	Description	How to clean	Avoid these cleaners
3	605	Polished brass, clear coated	Mild non-abrasive detergent with damp cloth or sponge	Abrasive cleaners, bleach solvents, steel or bronze wool
4	606	Satin brass, clear coated		
9	611	Polished bronze, clear coated		
10	612	Satin bronze, clear coated		
BSP	—	Black Suede Powder Coat		
32DCP	—	Satin stainless steel, clear coated		
10B	613	Oxidized bronze, oil rubbed	Lemon oil polished with dry cloth	Abrasive cleaners, bleach solvents, steel or bronze wool
10BE	613E	Dark oxidized satin bronze, equivalent		
10BL	613L	Oxidized satin, bronze, clear coated	Mild non-abrasive detergent with damp cloth or sponge	Abrasive cleaners, bleach solvents, steel or bronze wool
14*	618*	Polished nickel, clear coated		
15*	619*	Satin nickel, clear coated		
20D	624	Statuary dark bronze, clear coated		
26*	625*	Polished chrome		
26D*	626*	Satin chrome		
32*	629*	Polished stainless steel		
32D*	630*	Satin stainless steel	Plastic pad or bronze wool	Cleaners, solvents, bleach, steel wool

* Exit devices are available in all standard finishes, except 14, 15, 26 & 26D. With these finishes, exit devices are supplied in 32 or 32D to match accordingly. 32 or 32D is automatically supplied when 26 or 26D is specified. For nickel finishes, specify 14/32 or 15/32D to receive nickel finished trims and stainless exit devices.

Note: FLW & FSW are NOT available in 32 or 32D

Note: Pulls and thumb piece trims are not available in 14, 15, 26 or 26D except FLW & FSW which are available in 14 and 15.

LOCK/CYLINDER FINISH

Device Finish	Cylinder/Core*
03, 04, 09, 10, 10B, 10BE, 10BL, 20D	04
14, 15, 26, 26D, 32, 32D	15
BSP	BSP

*Finish when cylinder provided with Device

TO AVOID DISCOLORATION AND PITTING:

- Keep stainless steel away from contact with other metals
- Avoid cleaning with mineral acids or chlorine products
- Avoid cleaning with abrasive products like sandpaper or steel wool

TO MAINTAIN THE FINISH:

- Remove any contamination before damage occurs
- Protect with a metal polish or car wax

Copyright © 1998-2025, SARGENT Manufacturing Company. All rights reserved. Reproduction in whole or in part without the express written permission of SARGENT Manufacturing Company is prohibited. Patent pending and/or patent www.assaabloydss.com/patents.

Architectural Specifications

SARGENT
ASSA ABLOY

2.01 EXIT DEVICES

A. Exit devices shall be 80 Series push rail devices as manufactured by SARGENT Manufacturing Company, New Haven, CT.

B. Exit devices shall be certified to meet or exceed the requirements of ANSI/BHMA A156.3 Grade 1.

C. Exit devices shall be listed by Underwriters Laboratories for panic and bear the UL label for life safety in full compliance with NFPA 80 and NFPA 101. Exit devices for fire labeled doors shall be UL listed as "Fire Exit Hardware".

D. Exit Devices shall be certified to meet the requirements of ANSI/BHMA A156.41, Door Hardware Single Motion To Egress.

E. Provide standard hex key dogging on non fire-rated exit devices, with cylinder dogging (i.e., SARGENT 16- option) as an option.

F. Exit devices shall comply with UL 10C positive pressure requirements.

G. Construction:

1. Chassis shall be of heavy duty cast design with one piece drawn nonferrous removable covers matching the material of the push and mounting rails.
2. Stamped steel chassis are not acceptable.
3. Mounting rails shall be formed from a solid single piece of stainless steel, brass or bronze no less than 0.072 inches thick.
4. Push rails shall be constructed of 0.062 inch thick material in the same manner as the mounting rail. Painted or anodized aluminum shall not be considered heavy duty and are not acceptable.
5. Provide protective Lexan touchpad on the exit device push rail to prevent scratches and serve as a visible guide to the user.
6. Metal end caps shall be formed from the same base metal as the push and mounting rails.

H. Exit devices shall have a maximum of 3 inches projection from the face of the door in the non-dogged position. When in the dogged position, the device shall have no more than a 2-1/8 inch projection from the door face.

I. The design of the exit device shall eliminate the necessity of removing the device from the door for standard maintenance or keying changes.

J. The device chassis shall be mounted and operable without the need of the rail or the chassis cover.

K. Trim shall be through-bolted.

L. Devices shall be available with matching trim for both wide and narrow stile doors, including electrified functions when required.

M. Exit device operating lever trim shall withstand 1000 inch pounds of torque without allowing access.

N. Lever trim shall be available in architectural finishes and designs to match that of the locksets specified.

O. Provide electrified exit devices with ElectroLynx® standardized plug connectors to accommodate up to twelve wires.

P. Plug connectors shall plug directly into ElectroLynx® through-door wiring harnesses for connection to electric transfer hinge and power supplies.

Q. Provide sufficient number of concealed wires to accommodate electric function of specified hardware.

R. Exit devices shall have a five year limited warranty.

These guidelines should be referenced regularly and as required for proper appearance and longevity of finish.

Copyright © 1998-2025, SARGENT Manufacturing Company. All rights reserved. Reproduction in whole or in part without the express written permission of SARGENT Manufacturing Company is prohibited. Patent pending and/or patent www.assaabloydss.com/patents.

Notes

Copyright © 1998-2025, SARGENT Manufacturing Company. All rights reserved. Reproduction in whole or in part without the express written permission of SARGENT Manufacturing Company is prohibited. Patent pending and/or patent www.assaabloydss.com/patents.

The ASSA ABLOY Group is the global leader in access solutions. Every day, we help billions of people experience a more open world.

ASSA ABLOY Opening Solutions leads the development within door openings and products for access solutions in homes, businesses and institutions. Our offering includes doors, frames, door and window hardware, mechanical and smart locks, access control and service.

SARGENT Manufacturing Company
100 Sargent Drive
New Haven, CT 06511 USA
800-727-5477
www.sargentlock.com

Founded in the early 1800s, SARGENT® is a market leader in locksets, cylinders, door closers, exit devices, electro-mechanical products and access control systems for new construction, renovation, and replacement applications. The company's customer base includes commercial construction, institutional, and industrial markets.

Copyright © 1998-2025, SARGENT Manufacturing Company. All rights reserved. Reproduction in whole or in part without the express written permission of SARGENT Manufacturing Company is prohibited. Patent pending and/or patent www.assaabloydss.com/patents.

90641 10/25