McKinney
Full Line Catalog

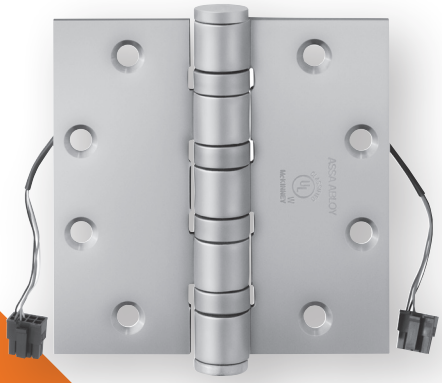

McKinney®
ASSA ABLOY

Experience a safer
and more open world

Numerical Index	**4**
General Information	**5-29**
About McKinney and Sales & Support	5-6
Warranty and Hinge Types	7-8
Bearings and Knuckle Features	9-10
Hinge Tips and Pins	11-12
Applications and Hinge Selection	13-17
Reference Charts	18-23
Hand of Doors and Hinges	24
Hinge Swaging	25
Screws and Fasteners	26-27
Finishes, Product Maintenance and Care	28-29
Full Mortise Hinges	**FM-1 – FM-17**
Full Mortise Bearing Hinges - Two Knuckle Standard Weight Series	FM-1
Full Mortise Bearing Hinges - Two Knuckle Heavy Weight Series	FM-2
Full Mortise Bearing Hinges - Three Knuckle Standard Weight Series	FM-3
Full Mortise Bearing Hinges - Three Knuckle Heavy Weight Series	FM-4
Full Mortise Institutional Hinges - Three Knuckle Hospital Tip Heavy Weight Series	FM-5
Swing Clear Full Mortise Bearing Hinges - Three Knuckle Heavy Weight Series (Reversible)	FM-6
Full Mortise Plain Bearing Hinges - Five Knuckle Standard Weight Series	FM-7
Hinge Pin Door Stop	FM-7 – FM-8, FM-16
Full Mortise Bearing Hinges - Five Knuckle Standard Weight Series	FM-8
Full Mortise Concealed Bearing Hinges - Five Knuckle Standard Weight Series	FM-9
Wide Throw Full Mortise Bearing Hinges - Five Knuckle Standard Weight Series	FM-10
Full Mortise Bearing Hinges - Five Knuckle Heavy Weight Full Mortise Series	FM-11
Full Mortise Concealed Bearing Hinges - Five Knuckle Heavy Weight Full Mortise Series	FM-12
Wide Throw Full Mortise Bearing Hinges - Five Knuckle Heavy Weight Wide Throw Series	FM-13
Swing Clear Full Mortise Bearing Hinges - Five Knuckle Standard Weight Swing Clear Series (Reversible)	FM-14
Swing Clear Full Mortise Bearing Hinges - Five Knuckle Heavy Weight Swing Clear Series (Reversible)	FM-15
Full Mortise Hinges - MacPro® Five Knuckle Standard Weight Series	FM-16
Full Mortise Hinges - MacPro® Five Knuckle Heavy Weight Series	FM-17
Full Mortise Anchor Hinges	**AH-1 – AH-4**
Three Knuckle Heavy Weight Anchor Hinges Series – Concealed Door Closers	AH-1
Three Knuckle Heavy Weight Anchor Hinge Series – Surface Applied Door Closers	AH-2
Three Knuckle Heavy Weight Anchor Hinge Series – Concealed Door Closers	AH-3
Three Knuckle Heavy Weight Anchor Hinge Series – With 4" Door Leg	AH-4
Half Mortise Hinges	**HM-1 – HM-3**
Half Mortise Bearing Hinges - Five Knuckle Standard Weight Half Mortise Series (Reversible)	HM-1
Half Mortise Bearing Hinges - Five Knuckle Heavy Weight Half Mortise Series (Reversible)	HM-2
Swing Clear Half Mortise Bearing Hinges - Five Knuckle Heavy Weight Half Mortise Swing Clear Series (Reversible)	HM-3
Half Surface Hinges	**HS-1 – HS-4**
Half Surface Plain Bearing Hinges - Five Knuckle Standard Weight Series (Reversible)	HS-1
Half Surface Bearing Hinges - Five Knuckle Heavy Weight Series (Reversible)	HS-2
Swing Clear Half Surface Bearing Hinges - Five Knuckle Heavy Weight Series (Reversible)	HS-3
Hinge Back Plates	HS-4
Full Surface Hinges	**FS-1 – FS-2**
Full Surface Bearing Hinges - Five Knuckle Heavy Weight Series (Reversible)	FS-1
Full Surface Bearing Hinges - Five Knuckle Standard Weight Series (Reversible)	FS-2
Spring Hinges & Pivots	**SH-1 – SH-5**
Full Mortise Single Acting Standard Weight Spring Hinge	SH-1
MacPro® Adjustable Spring Hinge	SH-2
Full Surface Double Acting Door Spring	SH-2
Single Acting 6" Hinge	SH-3
Non-Template Double Acting Spring Hinge	SH-4 – SH-5
Gravity Double Acting Pivot Hinge	SH-6
Non-Adjustable Double Acting Spring Pivot	SH-6

McKinney is a brand associated with ASSA ABLOY Accessories and Door Controls Group, Inc. Copyright © 2012-2025, ASSA ABLOY Accessories and Door Controls Group, Inc. All rights reserved. Reproduction in whole or in part without the express written permission of ASSA ABLOY Accessories and Door Controls Group, Inc. is prohibited.

Rescue Hardware	**RH-1 – RH-4**
Jamb Mount Pivot Set	RH-1
Combination Strike and Stop	RH-2
Emergency Door Stop	RH-3
Double Lipped Strike	RH-3
Electrified Hinges	**EH-1 – EH-10**
Electrolynx® Hinge (QC Option)	EH-1
ElectroLynx® Retrofit Cables	EH-2
MacPro® Electric Hinges	EH-3
Concealed Circuit Electric Hinge (CC option)	EH-4
ElectroLynx® Power over Ethernet (PoE) Hinge and Wiring Harnesses	EH-5 – EH-6
Magnetic Monitoring Hinge (MM Option)	EH-7
Concealed Electrical Hinges	EH-8
Electrified Hinge Service Kit and Molex Hand Crimp Tool	EH-9
Extraction Tool and Electrical Power Transfer	EH-10
Door Chord and Junction Box for Electric Hinges	EH-10
Specialty Hinges	**SP-1 – SP-13**
StormPro Tornado Resistant Hinges	SP-1
Pocket Pivot Hinges	SP-2
Raised Barrel Full Mortise Standard and Heavy Weight Hinges	SP-3
Slip-In Full Mortise Type I and Type II Standard Weight Bearing Hinges	SP-4
Full Mortise Interim Hinges	SP-5
Residential Swing Clear Hinge	SP-6
RediFrame Swing Clear Hinge	SP-6
Residential Spring Hinges	SP-7
Residential Hinges	SP-7
Decorative Hinges - Square Barrel	SP-8
Decorative Hinges - Olive Knuckel	SP-9
Concealed Hinges and Accessories	SP-10 – SP-12
Cam Lift Hinges and Pivot Reinforcing Hinges	SP-13

McKinney is a brand associated with ASSA ABLOY Accessories and Door Controls Group, Inc. Copyright © 2012-2025, ASSA ABLOY Accessories and Door Controls Group, Inc. All rights reserved. Reproduction in whole or in part without the express written permission of ASSA ABLOY Accessories and Door Controls Group, Inc. is prohibited.

McKinney
ASSA ABLOY
Experience a safer and more open world

Numerical Index

451	SH-2
452	SH-2
453	SH-2
1001	SH-4
1001 6X4-1/2	SH-5
1400	SP-7
1414	SP-7
1458	SP-7
1502	SH-1, SP-7
1552	SH-1, SP-7
4007	SH-6
5540	SP-13
5545	SP-13
6100	SH-3
8007	SH-6
8540	SP-13
8545	SP-13
BP-10	HS-4
BP-11	HS-4
CC Option	EH-4
CSS-9	RH-2
DLS-8	RH-3
DS-6	RH-3
EP-5J	RH-1
EPT	EH-10
H8007	SH-6
Hinge Pin Door Stop	FM-7, FM-8, FM-16
HTA386	FM-5
HTA786	FM-5
Interim Hinges	SP-5
McK-EPT	EH-10
McK-EPTL	EH-10
McK-TSB-C	EH-10
MG-16	EH-10
MK1821A	SP-10
MK4001A	SP-10
MK80	SP-10
MK80A	SP-10
MK80SS	SP-10
MK100	SP-11
MK100ME	EH-8, SP-11
MK130+8	SP-11
MK130+8ME	EH-8, SP-11
MK150	SP-12
MK150ME	EH-8, SP-12
MK200	SP-12
MK200ME	EH-8, SP-12
MK250	SP-13
MKCL134	SP-15
MKCL180	SP-15
MKCL250	SP-15
MKCL2500	SP-15
MM Option	EH-7
MP79	FM-16
MP91	FM-16
MPB79	FM-16
MPB91	FM-16
MPB79 QC or CC Option	EH-3
MPB91 QC or CC Option	EH-3
MPB68	FM-17
MPB99	FM-17
MPB68 QC or CC Option	EH-3
MPB99 QC or CC Option	EH-3
MPS60	SH-2
MPS679	SH-2
PH-4	SP-2
PoE Option	EH-5, EH-6
QC Option	EH-1, EH-2
QC-R001	EH-9
QC-R002	EH-10
QC-R003	EH-9
RB-TA2314	SP-3
RB-TA2714	SP-3
RB-T4A3386	SP-3
RB-T4A3786	SP-3
RediFrame Swing Clear Hinge	SP-6
Residential Hinges	SP-6, SP-7
Slip-In Hinge	SP-4
SP3386	SP-1
SP3786	SP-1
SQ314	SP-8
SQ3331	SP-8
TA314	FM-3
TA386	FM-4
TA391	AH-1
TA392	AH-2
TA393	AH-3
TA394	AH-4
TA714	FM-3
TA786	FM-4
TA791	AH-1
TA792	AH-2
TA794	AH-4
TA795	FM-6
TA2314	FM-8
TA2314 Interim	SP-5
TA2371	FS-2
TA2372	HS-1
TA2395	FM-14
TA2398	FM-10
TA2714	FM-8
TA2714 Interim	SP-5
TA2731	FM-1
TA2771	FS-2
TA2772	HS-1
TA2774	HM-1
TA2798	FM-10
TA2895	SP-6, FM-14
TA3331	FM-1
TA3350	FM-2
TA3374	HM-1
TA3383	SP-9
TA3750	FM-2
TA4895	FM-14, SP-6
TCA2314	FM-9
TCA2714	FM-9
TCA3386	FM-12
TCA3786	FM-12
TSB	EH-10
T2895	SP-6
T2314	FM-7
T2714	FM-7
T4A3381	FS-1
T4A3382	HS-2
T4A3384	HM-2
T4A3386	FM-11
T4A3386 Interim	SP-5
T4A3386 Wide Throw	FM-13
T4A3395	FM-15
T4A3781	FS-1
T4A3782	HS-2
T4A3784	HM-2
T4A3786	FM-11
T4A3786 Interim	SP-5
T4A3786 Wide Throw	FM-13
T4A3789	HM-3
T4A3795	FM-15
T4A3796	HS-3

McKinney is a brand associated with ASSA ABLOY Accessories and Door Controls Group, Inc. Copyright © 2012-2025, ASSA ABLOY Accessories and Door Controls Group, Inc. All rights reserved. Reproduction in whole or in part without the express written permission of ASSA ABLOY Accessories and Door Controls Group, Inc. is prohibited.

About the McKinney Line

McKinney is ASSA ABLOY's line of high quality architectural hinges for commercial use. McKinney joined the ASSA ABLOY family of products in 1996. Under the ASSA ABLOY banner, we have greatly expanded the research and development, and manufacturing capabilities of this product line to have the most impact on improving custom hinge manufacturing.

Custom Manufacturing

A variety of materials and hinge types can be custom manufactured in the Berlin, CT plant, including the ElectroLynx® hinges and Power over Ethernet hinges. For more information on custom manufactured hinges, call McKinney.

Innovation

To support today's need for electronic security applications, we have developed a variety of electric hinges used in remote door monitoring and access control systems, and received a patent on the Power over Ethernet (PoE) hinge. In addition, by combining McKinney hinges with other ASSA ABLOY Group products, we can offer StormPro tornado resistant solutions.

Decorative Hinges

The McKinney line of decorative architectural hinges comes with special tips and finishes. Designed to suite with hardware from ASSA ABLOY Group brands, these commercial decorative hinges open up a whole new world of design options for your door openings. See the McKinney Architectural Hinge Brochure for the complete offering.

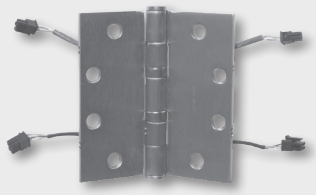

McKinney PoE Hinge, U.S. Patent No. 7,824,200

the good design studio

The Good Design Studio - your resource for beautiful doors, frames and hardware from ASSA ABLOY Group brands. Visit www.thegooddesignstudio.com to learn more.

Corbin Russwin 107 and SARGENT ME lever

McKinney 2 knuckle hinge with round end tips

Rockwood small door pull

LEED Certification Contribution

ASSA ABLOY can help to achieve prerequisites and accumulate points in several categories and credit areas of LEED. For further information, please call 1 800 346 7707 or refer to our website www.assaabloydooraccessories.us.

ASSA ABLOY is a member of the USGBC and CaGBC U.S. Green Building Council logo is a trademark owned by the U.S. Green Building Council and is used with permission.

McKinney
ASSA ABLOY

Experience a safer and more open world

800-346-7707 | www.mckinneyhinge.com

Check the web site for the up-to-date catalog

McKinney is a brand associated with ASSA ABLOY Accessories and Door Controls Group, Inc. Copyright © 2012-2025, ASSA ABLOY Accessories and Door Controls Group, Inc. All rights reserved. Reproduction in whole or in part without the express written permission of ASSA ABLOY Accessories and Door Controls Group, Inc. is prohibited.

Sales & Support

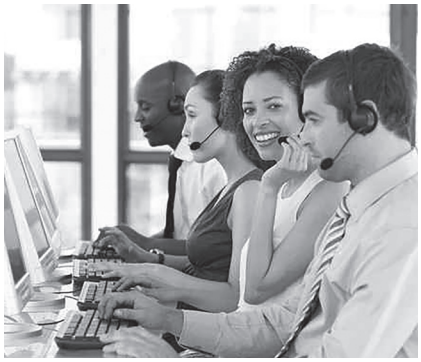

The McKinney product line is represented by the ASSA ABLOY Door Security Solutions team.

Phone: 1-800-DSS-EZ4U (1-800-377-3948)
Address: 110 Sargent Drive, New Haven, CT 06511
Website: www.assaabloydss.com
Email: Contact your local ASSA ABLOY Door Security Solutions Representative via e-mail by going to www.assaabloydss.com and clicking on “Sales Support”.

Customer Service and Tech Support Representatives are available during regular business hours at 1-800-346-7707 or email customerservice.mckinney@assaabloy.com or techsupport.mckinney@assaabloy.com.

Visit the Architectural Door Accessories website for the most up-to-date catalogs, promo sheets and templates: www.assaabloydooraccessories.us

Order online from the Architectural Door Accessories WebShop:
https://accessories.assaabloy.com/
For WebShop assistance call 203-821-5763.

Many popular McKinney products are stocked and ready to ship from warehouses in Ventura, CA and Berlin, CT. In addition, over 400 stock items are included in a 3-day QuickShip Program from the Berlin, CT plant. Details on the QuickShip program are available on the website.

Terms & Conditions

Complete shipment of the order must be accepted by Purchaser within normal lead times. The QUOTE number must be referenced on the order. The QUOTE is null and void if the Purchase Order does not include **ALL** product lines listed on the QUOTE or if the quantities for an item covered by the QUOTE deviate by **10%** or more.
Terms are 1% 15 Net 30. A charge of $50.00 will be made for itemization. A charge of $25.00 will be made when changes are requested on itemized jobs already processed. No invoice will be rendered for less than $50.00 net. On non-standard items a 5% over or under run constitutes a complete order.

Freight Policy

For freight policy terms & conditions please click here or see brand price book.

Terms

It is understood that a finance charge may be imposed which is the lesser or one and one-half percent (1 1⁄2) per month of the highest rate allowed by law on any amount which becomes past due and delinquent. Additionally, the Customer shall be responsible for all collection costs, court costs and reasonable attorney’s fees (where allowed by law) in connection with the recovery of any delinquent amount.

Credit

Acceptance of orders and deliveries thereof shall at all times be subject to our approval of credit.

Shipments

Once in the hands of the transportation company, the Purchaser assumes the risk of loss or damage in transit.
All goods are F.O.B. shipping point via the most economical routing, with carrier chosen by us.

Returned Goods

No credit will be issued for returned goods unless such return is authorized. If such authorization is given by us, there will be a minimum handling charge of 45% or $50.00 which ever is greater, for stock items shipped within a 90 day period from the date of the request.

Cancellations

We are unable to accept cancellations or changes on non-stock and special ordered (s/o) items once processing begins.
A charge will be assessed based on manufacturing expense incurred.

McKinney is a brand associated with ASSA ABLOY Accessories and Door Controls Group, Inc. Copyright © 2012-2025, ASSA ABLOY Accessories and Door Controls Group, Inc. All rights reserved. Reproduction in whole or in part without the express written permission of ASSA ABLOY Accessories and Door Controls Group, Inc. is prohibited.

Product Warranty

Our products are guaranteed to be free of defects in both workmanship and materials for a period of one year. Any bending, defacing or modification of our product after leaving the factory will void the warranty. Liability shall be limited to the replacement of product or component determined to be defective and shall not include costs arising from removal or reinstallation of product. Cost of replacement shall not exceed original purchase price.

Written notice of damages must occur within the warranty period. A factory generated Return Goods Authorization will be provided as no goods will be accepted without prior approval. These defective goods must be returned to our factory in Berlin, CT, unless specified otherwise. Freight charges must be pre-paid unless noted otherwise.

This guarantee is only valid if the products are specified, applied and adjusted in accordance with the instructions contained in the General Information Section of the McKinney product catalog and on frames and doors that are plumb and square.

Bulk Packed Hinges

We offer bulk packaging on most popular hinges. Hinges arrive ready-to-install with no interior packaging and screws in bulk, which reduces the amount of material to discard. This also saves time, especially on larger installations, as individual boxes do not need to be opened. The packaging is reinforced and holds 48 hinges. In addition, the box is strapped to ensure it arrives intact at its destination.

The program is offered on the hinges listed below in 26D, with other finishes available upon request.

Orders are shipped quickly in 3 days or less.

No.	Size	Finish	Material	Weight	Bulk Pack Quantity
T2714	4-1/2" x 4-1/2"	26D	Steel	STD	48
TA2714	4-1/2" x 4-1/2"	26D	Steel	STD	48
TA2714 NRP	4-1/2" x 4-1/2"	26D	Steel	STD	48
MacPro®:					
MP79	4-1/2" x 4-1/2"	26D	Steel	STD	48
MPB79	4-1/2" x 4-1/2"	26D	Steel	STD	48
MPB79 NRP	4-1/2" x 4-1/2"	26D	Steel	STD	48

TO ORDER: Add the suffix BP to the part number, for example TA2714 BP 4-1/2 x 4-1/2 26D

Hinge Types

Our broad range of full mortise hinges come in a variety of metals, finishes, sizes, and weights to meet all your load bearing and security applications. They include two, three, and five knuckle styles, swing clear hinges, wide throw hinges, anchor hinges, electric hinges, institutional hinges, and pivots.

ASSA ABLOY hinges conform to Government standards CS9-65 and SDI as well as the following standards approved by the Builders hardware Manufacturers/American National Standards Institute:

ANSI/BHMA Standard 156.1 -
The American National Standard for Butts and Hinges

ANSI/BHMA Standard 156.7 -
The American National Standard for Template Hinge Dimensions

ANSI/BHMA Standard 156.17 -
The American National Standard for Self-Closing Hinges & Pivots

ANSI/BHMA Standard 1156.18 -
The American National Standard for Material and Finishes

McKinney is a brand associated with ASSA ABLOY Accessories and Door Controls Group, Inc. Copyright © 2012-2025, ASSA ABLOY Accessories and Door Controls Group, Inc. All rights reserved. Reproduction in whole or in part without the express written permission of ASSA ABLOY Accessories and Door Controls Group, Inc. is prohibited.

McKinney
ASSA ABLOY
Experience a safer and more open world

Full Mortise Hinges

Our broad range of full mortise hinges come in a variety of metals, finishes, sizes, and weights to meet all your load bearing and security applications. They include two, three, and five knuckle styles, swing clear hinges, wide throw hinges, anchor hinges, electric hinges, institutional hinges, and pivots.

Full Surface Hinges

Choose from regular and swing clear models for heavy weight bearing or standard weight bearing applications in a choice of five knuckle styles are available.

Half Mortise Hinges

Available in a choice of metals, gauges, and sizes for a wide range of door thicknesses. You may specify plain bearing, standard weight bearing, or heavy weight bearing models. Regular and swing clear applications. Five knuckle styles are available.

Half Surface Hinges

Heavy weight bearing, standard weight bearing, and plain bearing hinges are available. Regular and swing clear applications. Five knuckle styles are available.

Security Hinges

Our assortment of electrical security hinges are suitable for a wide variety of control functions. Included are full mortise bearing hinges with either concealed circuitry or concealed switch. In addition, a unique, field-replaceable magnet monitoring hinge, featuring a magnetic reed concealed switch, is available. We also produce full mortise institutional hinges for maximum security installations.

Spring & Specialty Hinges

Included are full mortise single acting hinges. In addition, we produce a variety of hinges for special applications including anchor hinges, wide throw hinges, swing clear hinges, and pocket hinges.

Electric Hinges

To meet today's need for greater security applications, ASSA ABLOY developed a variety of electric hinges used in remote door monitoring and access control systems. These ElectroLynx® Hinges use convenient Molex connectors to make installation quick and simple.

Traditional wired connection electric hinges are available with 28 gauge and 18 gauge wires.

Also available are Magnetic Monitoring Hinges and electrified MK100ME Concealed Hinges.

Miscellaneous

ASSA ABLOY provides a standard duty center hung jamb mount pivot set as well as emergency door stops and strikes.

The most up to date templates are available on the website at www.assaabloydooraccessories.us.

McKinney is a brand associated with ASSA ABLOY Accessories and Door Controls Group, Inc. Copyright © 2012-2025, ASSA ABLOY Accessories and Door Controls Group, Inc. All rights reserved. Reproduction in whole or in part without the express written permission of ASSA ABLOY Accessories and Door Controls Group, Inc. is prohibited.

Hinge Bearings

We offer a number of bearing choices. Door weight, height, width, thickness and frequency of operation are all factors in determining the proper hinge.

Oil Impregnated Bearing (TA)

One piece, non-ferrous, and self-lubricating bearings ensure even longer-lasting wear and resistance to clogging, corrosion, and hinge failure. This feature is standard and supplied on all five knuckle bearing hinges up to 5" height. All 6" or larger are Ball Bearing hinges.

Ball Bearing (TB)

Ball bearings are available as an option on all five knuckle bearing hinges up to 5". All 6" hinges or larger are ball bearing as a standard.

Concealed Bearing (TCA)

Concealed, anti-friction type bearings are available on all five knuckle bearing hinges, which provide long-lasting wear and consistency of hinge barrel design.

Note: All three and two knuckle bearing hinges are provided with concealed, anti-friction type bearings (designated TA).

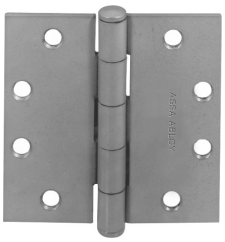

Plain Bearing

This is the designation for non-bearing hinges. Knuckles are machined with bearing-like surfaces to move against one another. These are not recommended for high frequency doors or doors with closing devices. These hinges are not approved for use in labeled openings.

McKinney is a brand associated with ASSA ABLOY Accessories and Door Controls Group, Inc. Copyright © 2012-2025, ASSA ABLOY Accessories and Door Controls Group, Inc. All rights reserved. Reproduction in whole or in part without the express written permission of ASSA ABLOY Accessories and Door Controls Group, Inc. is prohibited.

McKinney
ASSA ABLOY
Experience a safer and more open world

Hinge Knuckles

Our line includes two, three and five knuckle hinges.

Modern Two Knuckle

This model offers the most security in a standard hinge. The bearing hinges have a concealed stainless steel oil-impregnated bearing. Also, an anti-friction bushing in the door leaf provides additional protection against vertical and lateral wear.

- The Moderne two knuckle hinge is available in stainless steel
- Standard and heavy weight
- Pins in all bearing hinges are stainless steel
- Standard hinges are packed with all machine and all wood screws

By design, pins are non-rising, non-removable and tamper protected by a flush, non-removable cap at the end of the barrel. A door cannot be removed when in the closed position, thus affording maximum security. Intermediate hinges can be ordered opposite hand and installed upside down, to inhibit removal of the door in an open position.

- Available non-removable door (NRD) hinges have a dowel in the barrel. One NRD hinge can be ordered per set
- Two knuckle hinges are handed
- Template hinges are made to conform to U.S. Government standards*

Three Knuckle

Bearing hinges have concealed vertical and lateral thrust twin anti-friction type bearings at both joints.

- Pins in all non-ferrous bearing hinges are stainless steel
- Pins in all ferrous hinges are steel
- Pins in all hinges are non-rising type
- Standard hinges are packed with all machine and all wood screws
- Hinges are reversible for right or left hand except anchor hinges and certain electric hinges
- Template hinges are made to conform to U.S. Government standards*

Five Knuckle

Bearing hinges are furnished with either an oil-impregnated bearing (TA)** or ball bearing (TB). (TA is standard unless TB is specified.) Concealed bearings (TCA) are available.

- Pin stems in all non-ferrous bearing hinges are stainless steel
- Pins in all ferrous hinges are steel
- Pins in all hinges are non-rising type
- Template hinges are made to conform to U.S. Government standards*

**Refer to our website at www.assaabloydooraccessories.us for additional information regarding ASSA ABLOY bearings.

*Template hinges are made in sizes, gauges, and with screw holes located to conform to ANSI/BHMA A156.7 and U.S. Government standards CS9-65 and SDI. Templates are available on request.

PSF - Prison Safety Feature

A $^{7}/_{16}$" diameter stud projects from the back of each leaf which slips into a hole in the hinge reinforcing plates in both the door and the frame. This prevents the hinge from being removed even if the screws have been sheared off. This option is available on the HTA786 steel and HTA386 stainless prison hinge only.

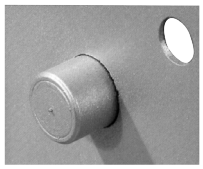

SSF - Safety Stud Feature

A stud attached to the face of one leaf rotates into a cavity in the opposite leaf when the door is closed. This option interlocks the two leaves together, preventing the removal of the door even if the pin is removed.

Available on Five Knuckle Hinges

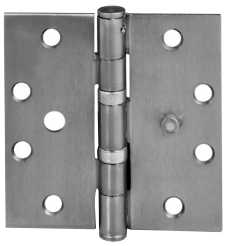

McKinney is a brand associated with ASSA ABLOY Accessories and Door Controls Group, Inc. Copyright © 2012-2025, ASSA ABLOY Accessories and Door Controls Group, Inc. All rights reserved. Reproduction in whole or in part without the express written permission of ASSA ABLOY Accessories and Door Controls Group, Inc. is prohibited.

Hinge Tips

Select tips for additional functionality or to add to the decor.

Button Tips (Standard)

Button Tips and plugs are standard on five knuckle hinges.

Flush Pins (Standard)

Flush pins and plugs are furnished on our two and three knuckle hinges.

Hospital Tips

Hospital tips which feature a one-piece non-removable pin with tapered tips. To order this option prefix our hinge number by “HT”. The hospital tip feature by design makes the pin virtually non-removable.

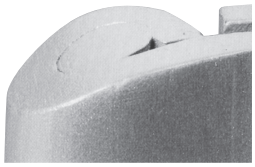

Decorative Tips

Decorative tips enhance the design of your interior. Available for the two or three knuckle hinge in flat, round, grooved or lined tip styles. These hinges are designed to suite with doors and hardware from the ASSA ABLOY Group brands.

Ball Tips

Ball Tips, made of solid brass, are available on five knuckle hinges for a more decorative hinge appearance. To order this option add the suffix “BT” to the hinge number.

Steeple Tips

Steeple Tips, made of solid brass, are available on five knuckle hinges for a more decorative hinge appearance. To order this hinge option, add the suffix “ST” to the hinge number.

McKinney is a brand associated with ASSA ABLOY Accessories and Door Controls Group, Inc. Copyright © 2012-2025, ASSA ABLOY Accessories and Door Controls Group, Inc. All rights reserved. Reproduction in whole or in part without the express written permission of ASSA ABLOY Accessories and Door Controls Group, Inc. is prohibited.

McKinney
ASSA ABLOY
Experience a safer and more open world

Hinge Pins

Pins, by design, are non-rising.

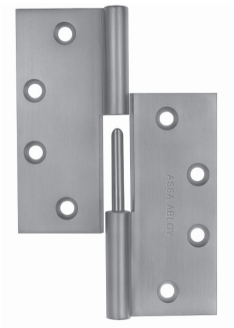

Two Knuckle

Pins on bearing hinges are furnished in stainless steel.

Three Knuckle

Pin stems in all non-ferrous bearing hinges are stainless steel. Pins in all ferrous hinges are steel.

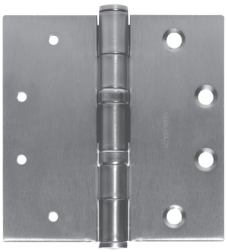

Five Knuckle

Pins on all non-ferrous bearing hinges are stainless steel with button tips.

Pins on all ferrous hinges are steel.

Non-Removable Pins

NRP

A set screw is driven into the barrel of the hinge that is inaccessible when the door is in the closed position. To order, add the suffix “NRP” to the hinge number.

NRD

Two knuckle hinges are available with a non-removable pin which features a dowel which is force fitted into the jamb leaf. When the door is hung, the pin is completely concealed and impossible to remove. One doweled hinge is usually furnished per set of three. To order, add the suffix “NRD” to the hinge number.

McKinney is a brand associated with ASSA ABLOY Accessories and Door Controls Group, Inc. Copyright © 2012-2025, ASSA ABLOY Accessories and Door Controls Group, Inc. All rights reserved. Reproduction in whole or in part without the express written permission of ASSA ABLOY Accessories and Door Controls Group, Inc. is prohibited.

Options

Round Corner Option

Furnished as 1/4" radius unless specified otherwise. 5/32" or 5/8" may be specified on full mortise hinges. Specify option “RC”.

RCT2714

Applications

This section will seek to address different variations of door, frame and wall conditions which you might encounter in hanging the door and the product solutions offered in the McKinney line.

Included are some of the more common conditions and some of the not-so-common conditions. The focus here will be on the type of hinge to use within a given door/frame/wall condition. The following examples are not intended to cover every possible situation in which a particular type hinge might be used, but only a representative sampling. Consult the factory for any unusual installation requirements not shown here.

Common Applications

Full Mortise Hinge

The most common application is a flush door/frame/wall condition using a hollow metal frame with a standard hollow metal or wood door which is flush or 1/16" inset from the face of the frame, with a wall which is either flush (or inset from the face of the frame. Recommended to hang door for 180˚ swing: Full Mortise Hinge. The same hinge could be used with a wood or aluminum frame provided the door/frame/wall conditions are flush.

Note: A fire labeled wood door requires sufficient hinge reinforcement to use this type hinge.

TA2714

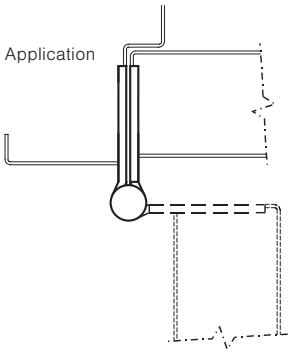

Less Common Flush Door/Frame/Wall Application

Half Mortise Hinge

A hollow metal or wood door with channel iron frame. Recommended to hang door for 180˚ swing: Half Mortise Hinge.

TA2774

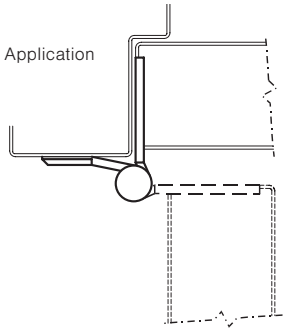

McKinney is a brand associated with ASSA ABLOY Accessories and Door Controls Group, Inc. Copyright © 2012-2025, ASSA ABLOY Accessories and Door Controls Group, Inc. All rights reserved. Reproduction in whole or in part without the express written permission of ASSA ABLOY Accessories and Door Controls Group, Inc. is prohibited.

Less Common Flush Door/Frame/Wall Application

TA2771

Application

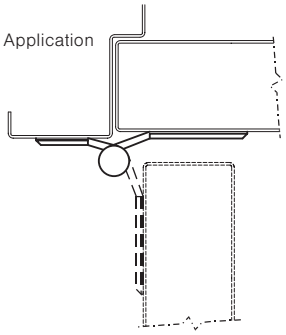

Full Surface Hinge

A fire labeled wood door (without sufficient hinge reinforcement) or a kalamein (metal-clad wood door) with channel iron frame. Recommended to hang door for 80˚ swing: Full Surface Hinge. On fire labeled wood doors, the door leaf is hung using a back plate with grommet nuts and bolts. Another popular application for this type hinge is a tubular steel gate hung on a channel iron frame.

TA2772

Application

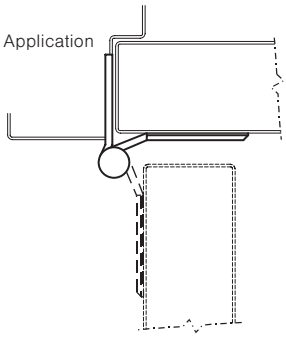

Half Surface Hinge

A fire labeled wood door (without sufficient hinge reinforcement) or a kalamein (metal-clad wood door) with channel iron frame. Recommended to hang door for 180˚ swing: Half Surface Hinge. On fire labeled wood doors, the door leaf is hung using a back plate with grommet nuts and bolts.

Special Applications

TA792

Application

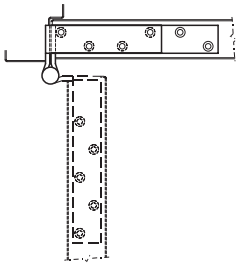

Anchor Hinge

On high frequency and/or heavy wood or metal doors, additional anchoring of the hinges into the door and jamb may be necessary. This is a common application in schools, hospitals or any other buildings where heavy traffic and unusual strain on the doors, jamb and hinges is experienced. Recommended to hang door for 80˚ swing: **Full Mortise Anchor Hinge**. Sold in sets of one full mortise anchor hinge and two heavy weight full mortise hinges.

Note: Anchor hinges are handed and sold for either square edge doors on hinge side or beveled (1/8" in 2") edge doors on hinge side. Hand and bevel (McKinney hinges use uses a "5" in front of the item number to indicate 1/8" in 2" bevel. Example: TA5792 should be specified.

McKinney is a brand associated with ASSA ABLOY Accessories and Door Controls Group, Inc. Copyright © 2012-2025, ASSA ABLOY Accessories and Door Controls Group, Inc. All rights reserved. Reproduction in whole or in part without the express written permission of ASSA ABLOY Accessories and Door Controls Group, Inc. is prohibited.

Special Applications

Spring Hinge

Some door/frame/wall and even ceiling conditions make door closers impractical. An alternative closing device is the Spring Hinge. Generally, at least two hinges on a door must be spring hinges to provide adequate closing force.

Note: NFPA requires a minimum of two (2) spring hinges on fire labeled doors. With adjustable spring tension on the hinge, the closing speed of the door is determined by the amount of closing force set on the hinge. Spring hinges may not be suitable for applications requiring a closing device with non-critical closing and latching speed adjustments. With respect to meeting ADA requirements for closing devices, carpeting and/or gasketing can interfere with latching.

1502
(Full Mortise Type)

Swing Clear Hinge

A condition which is common in barrier free openings, and especially in hospitals, is how to remove the door edge from the opening at 90˚ of swing with flush door/wall/ frame conditions. The solution offered by this hinge is the offset of the hinge barrel to a location along the face of the hinge jamb, thereby removing the door edge and the barrel of the hinge as obstacles in the opening at 90˚ or more of swing. If the door is beveled on the hinge side, specify the appropriate beveled hinge and handing for your application*.

*Consult individual Swing Clear catalog pages for beveled hinge product numbers.

Electric versions available- QC, CC, CC-18

TA2895

Application

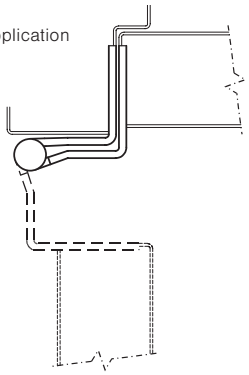

Meets or exceeds
ANSI A117.1 - 1986
Providing Accessibility and Usability for Physically Handicapped People

McKinney is a brand associated with ASSA ABLOY Accessories and Door Controls Group, Inc. Copyright © 2012-2025, ASSA ABLOY Accessories and Door Controls Group, Inc. All rights reserved. Reproduction in whole or in part without the express written permission of ASSA ABLOY Accessories and Door Controls Group, Inc. is prohibited.

McKinney
ASSA ABLOY
Experience a safer and more open world

Non-Flush Door/Wall/Frame Applications

TA2798

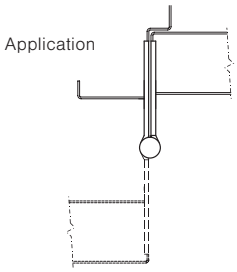

Wide Throw Hinge

If the door is not flush with the frame, is sitting back in a deep reveal from the face of the frame with or without additional obstacles created by applied trim on the face of the frame or a deeper reveal caused by a projecting wall, and the door is to swing 180˚, then a **Full Mortise Wide Throw Hinge** may be used in hanging the door.

Important in this regard is how to calculate the proper width of a wide throw hinge (rounded to the next higher whole number if result is not a whole number: e.g., 6", 7", 8", etc.)

How to Calculate the Proper Wide Throw Hinge Width

1. **If the door is sitting inside a deep frame reveal with no other obstacles (i.e., projecting trim or wall), add the depth of the reveal (distance from the face of the frame to the face of the door) to the recommended width of hinge used under flush conditions.**

   Example: A 6" wide (wide throw) hinge would replace a 4½" wide regular mortise hinge (used under flush conditions) if the depth of the reveal is 1½".

2. **If the door is to clear projecting trim or wall and the barrel of the hinge is not obstructed, then calculate as follows:**

   (a) double the size of the door

   (b) subtract ½" if the door thickness is less than or equal to 2¼" or subtract ¾" if the door thickness is greater than 2¼"

   (c) add for the additional depth from the face of the obstruction to the face of the door

   (d) add for clearance between the door and the face of the obstruction at 180˚ of swing (generally 1" or more).

   If, for instance, you have a 1¾" thick door:

   (a) 1¾" door thickness x 2 = 3½"

   (b) less ½" equals 3"

   (c) plus 3" for the additional depth from the face of the wall to the face of the door equals 6"

   (d) plus 1" for the clearance between the door and the face of the obstruction at 180˚ of swing equals 7" overall hinge width.

McKinney is a brand associated with ASSA ABLOY Accessories and Door Controls Group, Inc. Copyright © 2012-2025, ASSA ABLOY Accessories and Door Controls Group, Inc. All rights reserved. Reproduction in whole or in part without the express written permission of ASSA ABLOY Accessories and Door Controls Group, Inc. is prohibited.

Raised Barrel Hinge

If the door is not flush with the frame but rather is sitting back in a deep reveal from the face of the frame a **Full Mortise Raised Barrel Hinge** may be used in hanging the door. The solution offered by this hinge is the offset of the hinge barrel away from the hinge jamb. Bevel of door edge should be specified.

Raised Barrel Hinges (RB Prefix) are only available on 5-Knuckle 4½" x 4½" Standard and Heavy Weight and 5" x 4½" Heavy Weight only. The hinges have NRP and are reversible for handing.

Raised Barrel
Square Edge Door

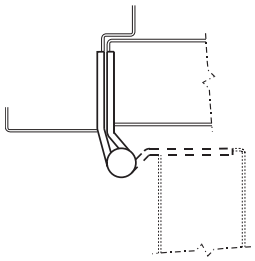

Raised Barrel
Beveled Edge Door

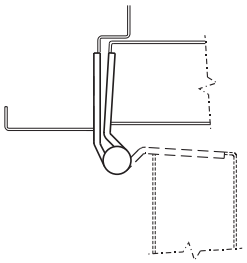

Pocket Hinge

An increasingly popular door, frame and wall condition in corridors is cross-corridor or double egress pairs of doors standing in wall pockets at 90˚ of swing, so as to be clear of the initial opening and out of the corridor altogether. Solution: **Pocket Hinge**.

As corridor doors are often fire labeled, the hardware must be approved for use in fire labeled openings. Solution: the **McKinney PH-4 Pocket Hinge**. UL approved for use on both hollow metal and steel covered composite fire doors rated up to 3 hours and on wood core type fire doors rated 20 minutes.

PH-4

Application

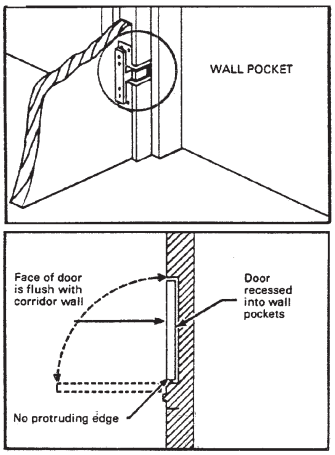

Pivots

Recommended for use on average frequency double acting doors in schools, hospitals, institutions and other public buildings. Not for use on labeled doors and frames.

EP-5J

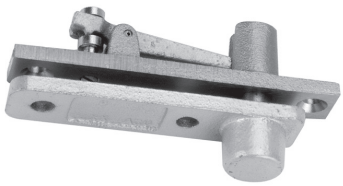

McKinney is a brand associated with ASSA ABLOY Accessories and Door Controls Group, Inc. Copyright © 2012-2025, ASSA ABLOY Accessories and Door Controls Group, Inc. All rights reserved. Reproduction in whole or in part without the express written permission of ASSA ABLOY Accessories and Door Controls Group, Inc. is prohibited.

McKinney
ASSA ABLOY
Experience a safer and more open world

Quick Reference Chart

Door, Frame Wall Conditions	Frame Type	Door Type	Hinge Type	Variation of Basic Hinge Type Shown Below (See Note 2)	McKinney Brand Example (See Note 3)
Flush*	Wood or Metal	Wood or Metal	Full Mortise	(not applicable)	TA2714
Flush*	Channel Iron	Wood or Metal	Half Mortise	(not applicable)	TA2774
Flush*	Channel Iron	Kalamein or Fire Labeled Wood Door (See Note 1)	Full Surface	(not applicable)	TA2771
Flush*	Metal	Kalamein or Fire Labeled Wood Door (See Note 1)	Half Surface	(not applicable)	TA2772
Flush*	Metal	Heavy and/or High Frequency Wood or Metal	Anchor	Full Mortise	TA792
Flush*	Wood or Metal	Wood or Metal Requiring Alternative Closing Device	Spring	Full Mortise Half Surface	1502
Flush*	Wood or Metal	Wood or Metal Required to Clear Opening at 90˚ of Swing	Swing Clear	Full Mortise	TA2895
Deep Frame Reveal	Wood or Metal	Wood or Metal with Maximum Swing of 90˚ to 110˚	Raised Barrel	Full Mortise	RBTA2714
Deep Frame Reveal with or without Trim on the Face of the Frame or a Projecting Wall	Wood or Metal	Wood or Metal with swing to 180˚	Wide Throw	Full Mortise	TA2798
Wall Pocket at 90˚ of swing	Metal	Wood or Metal	Pocket Hinge	(not applicable)	PH-4

* Includes door and frame conditions of up to 1/8" inset.

Notes:

1. Fire labeled wood door without sufficient hinge reinforcement. Door leaf is hung using back plate with grommet nuts and bolts.
2. The four basic hinge types are full mortise, half mortise, full surface and half surface. Variations (i.e. anchor, swing clear, raised barrel, wide throw) are available in the basic types shown above but may not be available in all basic hinge types. Consult individual catalog pages for availability.
3. Consult individual catalog pages for available sizes, weights, materials, versions, bearings and finishes. Hinges for doors beveled (1/8" in 2") on hinge side use 5000 series for 3K hinges (e.g. TA5792); use 4000 series for 5K hinges (e.g., TA4895).

McKinney is a brand associated with ASSA ABLOY Accessories and Door Controls Group, Inc. Copyright © 2012-2025, ASSA ABLOY Accessories and Door Controls Group, Inc. All rights reserved. Reproduction in whole or in part without the express written permission of ASSA ABLOY Accessories and Door Controls Group, Inc. is prohibited.

Door Weights

The following wood and metal door weights are provided as a convenience to catalog users. They are approximate and will vary slightly among door manufacturers. The weight of the door hardware should be added to the weights listed below. For any thickness not shown, the individual manufacturer's catalog should be consulted.

Door Weights* (Based upon 3' 0" x 7' 0" Door Size)

Hollow Metal Door Weights by Gauge		Wood Door Weights by Door Thickness		
Door Gauge —	**# Per Square Foot**			**# Per Square Foot**
20 Gauge Door	4	Door Thickness	$1^{3}/_{8}$"	$1^{3}/_{4}$"
18 Gauge Door	5	Particle/Mineral Core	4.75	5.25
16 Gauge Door	6	Stave Core Wood	3.75	4.25
14 Gauge Door	7	Hollow Core Wood	1.3	1.5

* Weights do not include hardware.

How to Determine the Proper Hinge Width

Knowing the door thickness and trim projection, use the following formula for determining minimum hinge width for all full mortise hinges:

W = 2 x (D - B) + C + I

D = Door Thickness

B = Backset

C = Clearance

I = Inset (if applicable)

W = Hinge Width

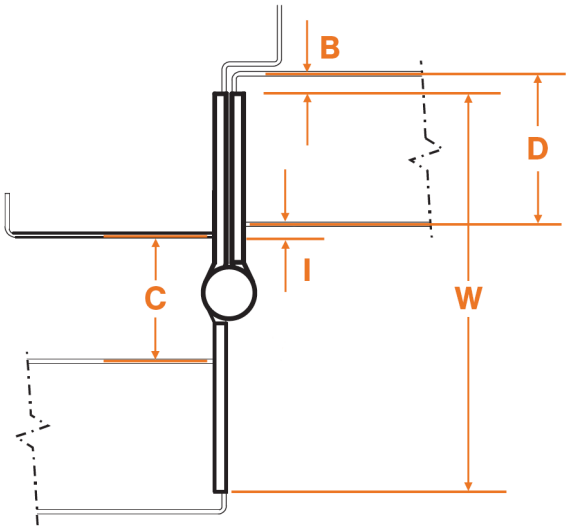

McKinney is a brand associated with ASSA ABLOY Accessories and Door Controls Group, Inc. Copyright © 2012-2025, ASSA ABLOY Accessories and Door Controls Group, Inc. All rights reserved. Reproduction in whole or in part without the express written permission of ASSA ABLOY Accessories and Door Controls Group, Inc. is prohibited.

McKinney
ASSA ABLOY
Experience a safer and more open world

The table below indicates the trim clearance provided by hinges of specified widths on flush doors, not inset, of standard thickness. For doors of other thicknesses, apply the proper formula.

Trim Clearance

Door Thickness	Hinge Width	Max Clearance Provided
1 3/8"	3 1/2"	1 1/4"
	4"	1 3/4"
1 3/4"	4"	1"
	4 1/2"	1 1/2"
	5"	2"
	6"	3"
2"	4 1/2"	1"
	5"	1/2"
	6"	2 1/2"
2 1/4"	5"	1"
	6"	2"

The hinge widths of half mortise, half surface and full surface hinges are standard, depending on the hinge length. Note that in these hinge types, the amount of clearance available is determined by the amount of offset and not by the hinge width.

Recommended Size of Hinges per Door (Wood or Metal)

Door Thickness in Inches (mm)	Door Width in Inches (mm)	Hinge Height in Inches (mm)	Hinge Gauge
1 3/8" (35)	Up to 36" (914)	3 1/2" (89)	.123
1 3/8" (35)	Over 36" (914)	4" (102)	.130
1 3/4" (44)	Up to 36" (914)	4 1/2" (114)	.134
1 3/4" (44)	36" – 48" (914 – 1219)	5" (127)	.134
1 3/4" (44)	Over 48" (1219)	6" (152)	.160
2" – 2 1/2" (51 – 64)	Up to 42" (1067)	5" (127) HW*	.190
2" – 2 1/2" (51 – 64)	Over 42" (1067)	6" (152) HW*	.203

* Heavy Weight hinges should be used on all extra heavy doors or those exposed to high frequency use. Consult the factory for doors wider than 3'0". Five knuckle heavy weight hinges are four bearing.
The following gauges of metal may apply:

Heavy weight 4 1/2" (114) high = .180 gauge

Heavy weight 5" (127) high = .190 gauge

Heavy weight 6" (152) high = .203 gauge

Note: Five knuckle 8" (203) high hinges have six bearings.

Note: On hinge size the dimension shown is the hinge height. Where full mortise or other hinges with two dimensions are used, the first dimension given is always the height. The second dimension is the hinge width when open.

McKinney is a brand associated with ASSA ABLOY Accessories and Door Controls Group, Inc. Copyright © 2012-2025, ASSA ABLOY Accessories and Door Controls Group, Inc. All rights reserved. Reproduction in whole or in part without the express written permission of ASSA ABLOY Accessories and Door Controls Group, Inc. is prohibited.

Expected Frequency of Door Operations

	Expected Frequency*		
Installation Type	**Daily**	**Yearly**	
Commercial			
Commercial Store Entrance	5,000	1,500,000	**High**
Office Building Entrance	4,000	1,200,000	
Theater Entrance	1,000	450,000	
School Entrance	1,250	225,000	
School Restroom Door	1,250	225,000	
Store or Bank Entrance	500	150,000	
Office Building Restroom Door	400	118,000	
School Corridor Door	80	15,000	**Average**
Office Building Corridor Door	75	22,000	
Store Restroom Door	60	18,000	
Residential			
Entrance	40	15,000	**Low**
Restroom Door	25	9,000	
Corridor Door	10	3,600	
Closet Door	6	2,200	

* One cycle = one complete opening and closing.

Note: We recommend that bearing hinges be used on all above categories other than “Residential”.

Recommended Number of Hinges per Door 3'0" Wide (Wood or Metal)

Door Height in Inches (mm)	# of Hinges Per Door
Up to 60 (1524)	2
60 – 90 (1524 – 2286)	3
90 – 120 (2286 – 3048)	4

Note: An additional hinge is required for each additional 30".

McKinney is a brand associated with ASSA ABLOY Accessories and Door Controls Group, Inc. Copyright © 2012-2025, ASSA ABLOY Accessories and Door Controls Group, Inc. All rights reserved. Reproduction in whole or in part without the express written permission of ASSA ABLOY Accessories and Door Controls Group, Inc. is prohibited.

Underwriters' Laboratories Requirements

The requirements of the Underwriters' Laboratories, Inc., for fire door hardware are determined by door label, which in turn is established by the location of the opening. The following are the classifications of Underwriter's Laboratories, Inc.

Door Situation	Location
Class A	Fire Walls
Class B	Vertical Shafts
Class C	Corridor & Room Partitions
Class D	Exterior Walls (severe fire exposure)
Class D	Exterior Fire Escapes (severe fire exposure)
Class E	Exterior Wall (moderate fire exposure)
Class E	Exterior Fire Escapes (moderate fire exposure)

On all public and some private heavy construction three hinges are required for each door. This practice is standard under U.S. Government specifications and is required under most building codes and Fire Underwriters' specifications.

Three hinges assure proper door alignment and enable other hardware to function properly. There is less door warping and less hinge wear. On light wood doors the alignment problem is as great as on heavy doors so less than three hinges should never be considered.

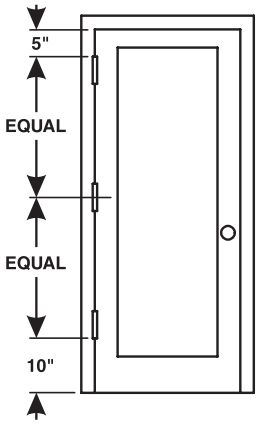

The top of the top hinge should be 5" from the jamb header.

The bottom of the bottom hinge should be 10" from the finished floor.

The center of the center hinge should be equidistant from the other two hinges.

EXCEPTION:

The McKinney Anchor Hinge mounts at the very top of the door. On doors over 7'6" high, four hinges are required.

McKinney is a brand associated with ASSA ABLOY Accessories and Door Controls Group, Inc. Copyright © 2012-2025, ASSA ABLOY Accessories and Door Controls Group, Inc. All rights reserved. Reproduction in whole or in part without the express written permission of ASSA ABLOY Accessories and Door Controls Group, Inc. is prohibited.

Table 1 Reference NFPA-80
Table 6.4.3.1 2022 Builders Hardware Mortise, Surface, and Full-Length Hinges, Pivots or Spring Hinges for Swinging Doors

Mortise and Surface Hinges, Pivots or Spring Hinges for Swinging Doors. Doors up to 60" (1.52 m) in height shall be provided with two hinges and an additional hinge for each additional 30" (0.76 m) of door height or fraction thereof. The distance between hinges shall be permitted to exceed 30" (0.76 m). Where spring hinges are used, at least two shall be provided.

	Maximum Door Size		Minimum Hinge Size		
Maximum Door Rating Hours	**Width ft. (m)**	**Height ft. (m)**	**Height in. (mm)**	**Thickness in. (mm)**	**Type Hinge**
For 1 3/4" (44.5mm) or Thicker Doors					
3 or less	4 (1.22)	10 (3.05)	4 1/2" (114.3)	0.180 (4.57)	Steel, Mortise or Surface
3 or less	4 (1.22)	8 (2.44)	4 1/2" (114.3)	0.134 (3.40)	Steel, Mortise or Surface
1 1/2 or less	3 1/6 (0.96)	8 (2.44)	6" (152.4)	0.225 (5.72)	Steel-Olive Knuckle or Paumelle
3 or less	4 (1.22)	10 (3.05)	4" (101.6)	0.225 (5.72)	Steel Pivots (including top, bottom and intermediate)
1 1/2 or less	3 (0.91)	5 (1.52)	4" (101.6)	0.130 (3.30)	Steel, Mortise or Surface
1 1/2 or less	2 (0.61)	3 (0.91)	3" (76.2)	0.092 (2.34)	Steel, Mortise or Surface
3 or less	3 (0.91)	7 (2.13)	4 1/2" (114.3)	0.134 (3.40)	Steel, Mortise or Surface (labeled self closing spring type)
3 or less	3 (0.91)	7 (2.13)	4" (101.6)	0.105 (2.67)	Steel, Mortise or Surface (labeled self closing spring type)
For 1 3/8" (34.93mm) Doors					
3 or less	3 (0.91)	7 (2.13)	3 1/2" (88.9)	0.123 (3.12)	Steel, Mortise or Surface
3 or less	2 2/3 (0.81)	7 (2.13)	3 1/2" (88.9)	0.105 (2.67)	Steel, Mortise, or Surface (labeled, self-closing, spring type)

Note: Table 6.4.3.1 lists the most common applications of hinges, spring hinges and pivots. Consult the door and hardware manufacturer's specific listings for applications not addressed in this table.

6.4.3* Builders Hardware.

6.4.3.1 Hinges and pivots. Hinges, spring hinges, continuous hinges, and pivots shall be as specified in individual door and hardware manufacturer's published listings or Table 6.4.3.1.

6.4.3.1.1* Doors up to 60 in. (1.52 m) in height shall be provided with at least two hinges.

6.4.3.1.2 Doors in excess of 60 in. (1.52 m) shall have an additional 30 in. (0.76 m) of door height or fraction thereof, or in accordance with the manufacturer's published listing.

6.4.3.1.3 The distance between hinges shall be permitted to exceed 30 in. (0.76 m).

6.4.3.1.4 Where spring hinges are used, at least two shall be provided.

6.4.3.1.5 All hinges or pivots, except spring hinges, shall be of the ball bearing type.

6.4.3.1.5.1 Hinges or pivots employing other antifriction bearing surfaces shall be permitted if they meet the requirements of ANSI/BHMA A156.1, Standard for Butts and Hinges.

6.4.3.1.5.2 Spring hinges shall be labeled and shall meet the requirements of ANSI/BHMA A156.17, Standard for Self Closing Hinges & Pivots, Grade 1.

6.4.3.1.6 Hinges 4-1/2 in. (114mm high and 0.180 in. (4.57mm) thick) shall be permitted for use on wide and heavy doors or doors that are subjected to heavy use or unusual stress.

6.4.3.1.7 Fire doors with hinges of lighter weight that are not of the ball bearing type shall be permitted under the following conditions:

(1) They are part of a listed assembly.
(2) They meet the test requirements of ANSI/BHMA A156.1, Standard for Butts and Hinges.
(3) They have been tested to a minimum of 350,000 cycles.

Reproduced with permission of NFPA from NFPA 80, Standard for Fire Doors and Other Opening Protectives, 2022 edition. Copyright© 2021, National Fire Protection Association. For a full copy of NFPA 80, please go to www.nfpa.org.

McKinney is a brand associated with ASSA ABLOY Accessories and Door Controls Group, Inc. Copyright © 2012-2025, ASSA ABLOY Accessories and Door Controls Group, Inc. All rights reserved. Reproduction in whole or in part without the express written permission of ASSA ABLOY Accessories and Door Controls Group, Inc. is prohibited.

Hand of Doors

All doors are handed - right or left. The following illustrations indicate clearly this “handing” as it is understood within the hardware industry.

Hand of door is determined from the outside.

When standing on outside of door and hinges are on the right, it is right hand. When hinges are on the left, it is left hand.

A double acting door opens from you and toward you, therefore it is not called reverse like a single acting door.

Regular Doors Opening In

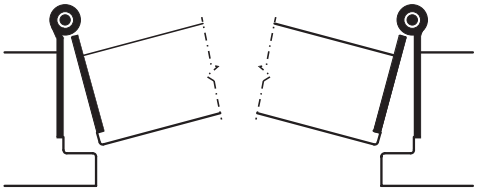

OUTSIDE
Left Hand Door takes left hand hinges

OUTSIDE
Right Hand Door takes right hand hinges

Reverse Doors Opening Out

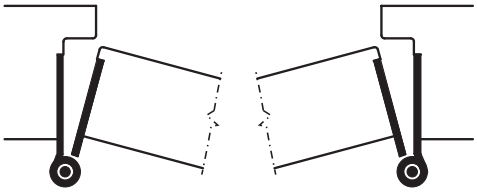

OUTSIDE
Left Hand Reverse Door takes right hand hinges

OUTSIDE
Right Hand Reverse Door takes left hand hinges

Double Acting Doors

Right Side of Hinge

Left Side of Hinge

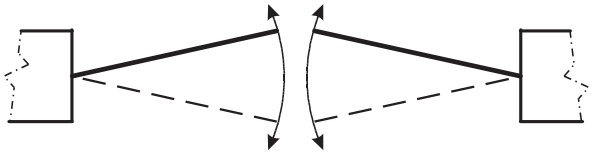

Left Side of Hinge
Left hand Door

Outside

Right Side of Hinge
Right Hand Door

Hand of Hinges

All doors are handed – right or left. The following illustrations indicate clearly this “handing” as it is understood within the hardware industry.

A simple method of determining the hand of all loose joint hinges is to open the hinge full with the countersunk screw holes in view. If the hinge can be held by the right hand leaf and it does not fall apart, it is a right hand (RH) hinge. If the hinge must be held by the left hand leaf to keep it from falling apart, it is a left hand (LH) hinge.

The hand of hinges may be specified by suffixing the symbols RH or LH to the catalog number.

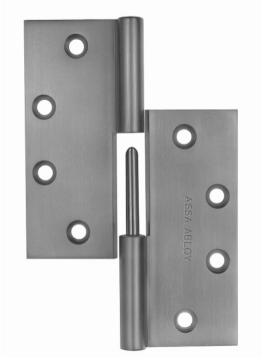

Right Hand

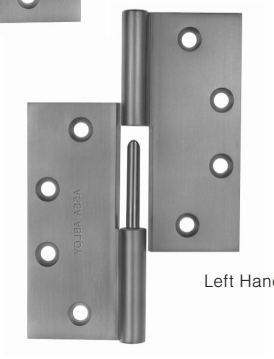

Left Hand

McKinney is a brand associated with ASSA ABLOY Accessories and Door Controls Group, Inc. Copyright © 2012-2025, ASSA ABLOY Accessories and Door Controls Group, Inc. All rights reserved. Reproduction in whole or in part without the express written permission of ASSA ABLOY Accessories and Door Controls Group, Inc. is prohibited.

Hinge Swaging

Swaging is the slight offset in the hinge leaves which permits them to close to a parallel position as the door closes.

Hinge Opened

Hinge Closed

Full Mortise

All hinges for full mortise applications are swaged. Normal swaging on standard and heavy gauge hinges provides a clearance of 1/16" when the leaves are parallel.

Hinge Opened

Hinge Closed

Full Surface

Hinges for full surface applications are not swaged. Blank hinges are for full surface welded application and are always furnished “flat back” unless specified otherwise when ordered.

Hinge Opened

Hinge Closed

Beveled Door

Hinges for beveled door applications have one leaf swaged at an angle of 3 1/2° (1/8" in 2") to maintain proper door and frame clearance when doors are beveled on the hinge side. Specify handing on these hinges.

Hinge with One Leaf Swaged

One Leaf Swaged

When only one leaf is swaged, the non-swaged leaf is approximately 1/16" shorter as a standard. For all hollow metal door and frame applications, both leaves must be the same width. On your order, specify **“Leaves must be equal”**.

Hinge with One Leaf Swaged Flat

One Leaf Swaged Flat

When only one leaf is swaged flat, the non-swaged leaf is approximately 3/32" shorter as a standard. For all hollow metal door and frame applications, both leaves must be the same width. On your order, specify **“Leaves must be equal”**.

McKinney is a brand associated with ASSA ABLOY Accessories and Door Controls Group, Inc. Copyright © 2012-2025, ASSA ABLOY Accessories and Door Controls Group, Inc. All rights reserved. Reproduction in whole or in part without the express written permission of ASSA ABLOY Accessories and Door Controls Group, Inc. is prohibited.

McKinney
ASSA ABLOY
Experience a safer and more open world

Screws and Fasteners

Templated Screw Holes

Our hinges are manufactured with templated screw hole locations and tolerances which conform to the American National Standards Institute (ANSI/BHMA A-156.7). We publish a complete listing of templates which list the overall hinge size, material gauge and exact screw hole location. The most current templates are found on our website www.assaabloydooraccessories.us. These templates should be consulted prior to any door or frame preparation.

Machine and Wood Screws

Shown:

1. Phillips Head Machine Screw
2. Torx Head Machine Screw
3. Machined Safety Torx Screw
4. Torx Head Wood Screw
5. Phillips Head Wood Screw
6. Oval Phillips Head Machine Screw with Grommet Nut

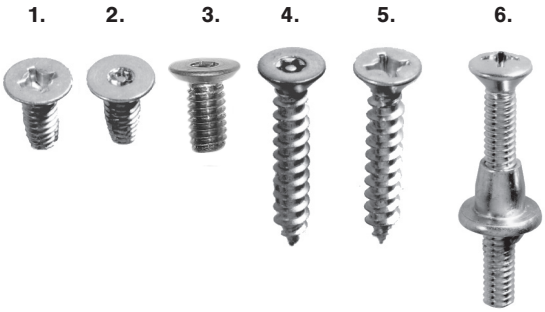

Note: Original Self-tapping Torx Screw (MK22209) should be used on installations where customer requires self-tapping screw (some installations might have drilled holes while others might require holes to be drilled)

New Machined Safety Torx Screw (MK22208) should be used on installations where the door and frame are already drilled and tapped.

McKinney is a brand associated with ASSA ABLOY Accessories and Door Controls Group, Inc. Copyright © 2012-2025, ASSA ABLOY Accessories and Door Controls Group, Inc. All rights reserved. Reproduction in whole or in part without the express written permission of ASSA ABLOY Accessories and Door Controls Group, Inc. is prohibited.

Full Mortise Hinges

Size of Hinge	Machine Screws	Wood Screws
3 1/2" x 3 1/2"*	1/2" x 10-24	1 x 10
3 1/2" x 5"	1/2" x 10-24	1 x 10
4" x 4"*	1/2" x 12-24	1 1/4 x 12
4 1/2" x 4"	1/2" x 12-24	1 1/4 x 12
4 1/2" x 4 1/2"	1/2" x 12-24	1 1/4 x 12
4" x 6"	1/2" x 12-24	1 1/4 x 12
4" x 7"	1/2" x 12-24	1 1/4 x 12
4 1/2" x 6"	1/2" x 12-24	1 1/4 x 12
4 1/2" x 7"	1/2" x 12-24	1 1/4 x 12
4 1/2" x 8"	1/2" x 12-24	1 1/4 x 12
5" x 4"	1/2" x 12-24	1 1/4 x 12
5" x 4 1/2"	1/2" x 12-24	1/4 x 12
5" x 5"	1/2" x 12-24	1 1/4 x 12
5" x 7"	1/2" x 12-24	1 1/4 x 12
5" x 8"	1/2" x 12-24	1 1/2 x 14
6" x 5"	1/2" x 1/4"-20	1 1/2 x 14
6" x 6"	1/2" x 1/4"-20	1 1/2 x 14
8" x 6"	1/2" x 1/4"-20	1 1/2 x 14
8" x 8"	1/2" x 1/4"-20	1 1/2 x 14

*1400-1414-1458 Residential Guide

Size of Hinge	Wood Screws
3 1/2" x 3 1/2"	3/4 x 9
4" x 4"	1 x 9

Half Mortise Hinges

Size of Hinge	Machine Screws
4 1/2"	1/2" x 12-24
5"	1/2" x 12-24
6"	1/2" x 1/4-20

Swing Clear Hinges

Size of Hinge	Machine Screws	Wood Screws
4 1/2"	1/2 x 12-24	1 1/4 x 12
5"	1/2 x 12-24	1 1/4 x 12

Full Surface Hinges

Size of Hinge	Machine Screws	Thru Bolts & Grommet Nut
4 1/2"	1/2 x 12-24	2 x 1/4-20
5"	1/2 x 12-24	2 x 1/4-20
6"	1/2 x 1/4-20	2 x 1/4-20

Half Surface Hinges

Size of Hinge	Machine Screws	Thru Bolts & Grommet Nut
4 1/2"	1/2 x 12-24	2 x 1/4-20
5"	1/2 x 12-24	2 x 1/4-20
6"	1/2 x 1/4-20	2 x 1/4-20

Packing:

Full mortise hinges are packed all machine x half wood screws.

McKinney is a brand associated with ASSA ABLOY Accessories and Door Controls Group, Inc. Copyright © 2012-2025, ASSA ABLOY Accessories and Door Controls Group, Inc. All rights reserved. Reproduction in whole or in part without the express written permission of ASSA ABLOY Accessories and Door Controls Group, Inc. is prohibited.

McKinney
ASSA ABLOY
Experience a safer and more open world

Finishes

McKinney hinge product finishes meet or exceed the American National Standards for materials and finishes (ANSI/BHMA - A156.18 and BHMA 1301).

Every effort is made to furnish finishes which do comply with the U.S. Standard. However, we cannot guarantee that our finish will match other manufacturers' finish. Where a special finish or a matched finish is required, a sample must be submitted with the order.

MicroShield®

ASSA ABLOY Group companies offer MicroShield®, an antimicrobial coating for door hardware. MicroShield uses proven silver ion-based technology from Agion®, a leading provider of antimicrobial solutions, to stem the spread of bacteria and other microbes.

MicroShield® is a registered trademark of ASSA ABLOY Access and Egress Hardware Group, Inc.

agion®

The Agion antimicrobial is not intended as a substitute for good hygiene. Coated products must still be cleaned to ensure the surfaces will be free of destructive microbes. ASSA ABLOY makes no representations or warranties, express or implied, as to the efficacy of the Agion antimicrobial. A copy of the Agion warranty is available upon request. Agion is a registered trademark of Agion Technologies, Inc., Wakefield, MA, USA.

Standard Architectural Finishes

BHMA Code	BHMA Code	McKinney/U.S. Code	Finish Description
Non-Ferrous (Brass or Stainless Steel)	**Ferrous (Steel)**		
605 (Brass)	632	3	Bright Brass, Clear Coated
606 (Brass)	633	4	Satin Brass, Clear Coated
611 (Bronze)	637	9	Bright Bronze, Clear Coated
612 (Bronze)	639	10	Satin Bronze, Clear Coated
614 (Bronze)	641	10A	Antique Bronze, Oil Rubbed and Clear Coated
613 (Bronze)	640	10B	Dark Oxidized Satin Bronze, Oil Rubbed
618 (Brass, Bronze)	645	14	Bright Nickel Plated, Clear Coated
619 (Brass, Bronze)	646	15	Satin Nickel Plated, Clear Coated
625 (Brass, Bronze)	651	26	Bright Chrome
626 (Brass, Bronze)	652	26D	Satin Chrome
629 (300 Series Stainless)	n/a	32	Bright Stainless Steel
630 (300 Series Stainless)	n/a	32D	Satin Stainless Steel

Custom Architectural Finishes

BHMA Code	BHMA Code	McKinney/U.S. Code	Finish Description
Non-Ferrous (Brass or Stainless Steel)	**Ferrous (Steel)**		
609 (Brass)	638	5	Satin Brass, Blackened, Satin Relieved, Clear Coated
610 (Brass)	636	7	Satin Brass, Blackened, Bright Relieved, Clear Coated
616 (Bronze)	643	11	Satin Bronze, Blackened, Satin Relieved, Clear Coated
623 (Bronze)	649	20	Light Oxidized Statuary Bronze, Clear Coated
624 (Bronze)	650	20A	Dark Oxidized Statuary Bronze, Clear Coated

Note: Check with factory for availability and pricing on these finishes.

McKinney is a brand associated with ASSA ABLOY Accessories and Door Controls Group, Inc. Copyright © 2012-2025, ASSA ABLOY Accessories and Door Controls Group, Inc. All rights reserved. Reproduction in whole or in part without the express written permission of ASSA ABLOY Accessories and Door Controls Group, Inc. is prohibited.

Powder Coat Finishes

Base Material	McKinney/U.S. Code	Finish Description
Steel	P	Primed for Painting
Steel	D3	Dark Bronze Powder Coat
Stainless Steel	10BE	Dark Oxidized Satin Bronze, Equivalent
Stainless Steel	BSP	Black Suede Powder Coat
Stainless Steel	WSP	White Suede Powder Coat
Stainless Steel	CPC	Clear Powder Coat
Stainless Steel	32DBIO	MicroShield Agion Antimicrobial

Note: May not be available on MacPRO or Rescue Hardware.

Product Maintenance & Care

The McKinney line of hinges are manufactured in compliance with all applicable federal and ANSI specifications.

The following are general maintenance tips for providing long life and proper finish appearance.

Hinges must be free swinging without any binding. To align the hinges to prevent binding the use of shims is recommended, if required. If the hinges begin to make noise, remove any binding conditions, grease or lubricate all moving parts, re-mount the hinge and re-adjust the hinge with the proper shims.

The hinges come “greased” from the factory, but should be checked on a regular basis for lubrication. ASSA ABLOY recommends that hinges used in commercial, high frequency applications or in extreme environmental conditions be lubricated annually to ensure long life and quiet operation.

To lubricate our standard hinge, remove the pin and apply a generous coating of lithium grease and reinsert the pin by driving it completely down to the shoulder of the pin head.

Hinges sized properly for the door weight, door size and frequency of use will last for a considerable period of time without maintenance. Hinge screws should be periodically inspected for tightness.

Steel hinges are intended for use on interior applications only. Brass and Stainless steel hinges can be used for either interior or exterior. All steel will eventually rust and all brass will eventually tarnish. To slow down the corrosion/tarnishing process, a clear coat of lacquer is applied on the top surface of the steel or brass materials and the finish surface. Plated finishes receive a clear coating of lacquer to protect against atmospheric conditions.

McKinney stainless steel hinges are made with 304 stainless steel material. Stainless steel is corrosion resistant, but not corrosion proof. Because there is at least 10.5% of chromium in stainless steel hinges, oxidation can occur which could leads to the appearance of “red rust”. This red rust could be caused from atmospheric conditions, when hinges are exposed to moist or marine environments, chemical conditions, such as being exposed to high chloride chemicals cleaners, or contact with steel, copper or other foreign materials. Never use steel wool to clean stainless steel hinges. Period cleaning is recommended to avoid seeing red rust on the hinges. We recommend using a general purpose stainless steel cleaner.

Many anti-bacterial cleaners used to clean and sanitize door hardware contain high levels of chlorides which will cause corrosion if not properly rinsed off. For additional corrosion protection, we recommend ordering stainless steel hinges with a clear powder applied over the base metal, (CPC).

Hinges that come painted or plated are in accordance with ANSI/BHMA finishing standards and ASTM B-117 salt spray standards.

Caution should be used when installing the hinges to avoid damage to the painted or plated finish. To remove dirt, the use of a soft damp cloth free any chemicals can be used. Abrasive cleaners or lacquer thinners should not be used to clean the surface of the hinges. To do so will void any warranty of that product.

Any questions about our product, please call us at 1-800-346-7707.

McKinney is a brand associated with ASSA ABLOY Accessories and Door Controls Group, Inc. Copyright © 2012-2025, ASSA ABLOY Accessories and Door Controls Group, Inc. All rights reserved. Reproduction in whole or in part without the express written permission of ASSA ABLOY Accessories and Door Controls Group, Inc. is prohibited.

McKinney
ASSA ABLOY
Experience a safer and more open world

Two Knuckle Standard Weight Series

Recommended for standard weight, medium frequency doors, or doors with closing devices.

- Full mortise bearing hinges are commonly used for the flush door/frame/wall application
- Two knuckle design has a clean finished look
- Specify right or left hand when ordering
- Decorative tips are available
- For available finishes see page 28

TA3331
TA2731

No.	ANSI Cross Reference	Base Material	Weight
TA3331	A5112	Stainless	STD
TA2731	A8112	Steel	STD

Application

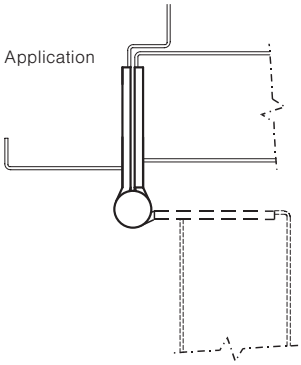

Specifications

Inches	mm	Gauge	No. of Holes	Fasteners Machine	Fasteners Wood
4" x 4"	101.6 x 101.6	.130	8	1/2 x 12-24	1 1/4 x 12
4 1/2" x 4"	114.3 x 101.6	.134	8	1/2 x 12-24	1 1/4 x 12
4 1/2" x 4 1/2"	114.3 x 114.3	.134	8	1/2 x 12-24	1 1/4 x 12
5" x 4 1/2"	127 x 114.3	.146	8	1/2 x 12-24	1 1/4 x 12
5" x 5"*	127 x 127	.146	8	1/2 x 12-24	1 1/4 x 12

* 5" x 5" TA2731 Only

Options:

Code	Description
NRD	Non-Removable Door – one set screwed hinge furnished per set
RC	Round Corner – 1/4" radius furnished unless specified otherwise
SSF	Safety Stud Feature
MM	Magnetic Monitoring
QC	ElectroLynx® hinge 4 or 8 wire available
CC	Concealed Circuit 4 or 8 wire available

Decorative Tip Options (TA2731 only)	
FT	Flat Tip
RT	Round Tip
GT	Grooved Tip
LT	Lined Tip
KT	Knurled Tip

Note: Not available on 3 1/2 " x 3 1/2" hinges

Approved for NFPA 80 fire rated openings

McKinney
ASSA ABLOY
Experience a safer and more open world

800-346-7707 | www.mckinneyhinge.com
Check the web site for the up-to-date catalog

McKinney is a brand associated with ASSA ABLOY Accessories and Door Controls Group, Inc. Copyright © 2012-2025, ASSA ABLOY Accessories and Door Controls Group, Inc. All rights reserved. Reproduction in whole or in part without the express written permission of ASSA ABLOY Accessories and Door Controls Group, Inc. is prohibited.

Two Knuckle Heavy Weight Series

Recommended for use on high frequency and/or heavy wood or metal doors in schools, hospitals or other public buildings where heavy traffic is experienced.

- Use for the common flush door/frame/wall application
- Heavy weight hinges should be used on all extra heavy doors or those exposed to high frequency use
- Two knuckle design has a clean finished look
- For Beveled Edge (where doors are beveled on hinge side) specify TA5350 or TA5750
- Specify right or left hand when ordering
- For available finishes see page 28

TA3350

TA3750

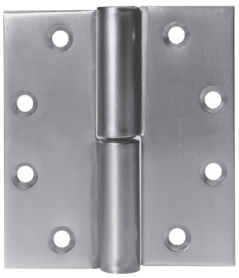

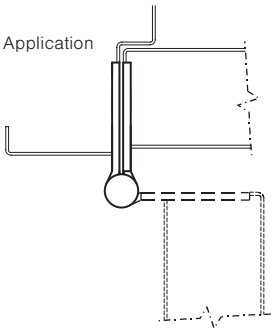

No.	ANSI Cross Reference	Base Material	Weight
TA3350	A5111	Stainless	HVY
TA3750	A8111	Steel	HVY

Specifications

Inches	mm	Gauge	No. of Holes	Fasteners Machine	Fasteners Wood
4 1/2" x 4 1/2"	114.3 x 114.3	.180	8	1/2 x 12-24	1 1/4 x 12
5" x 4 1/2"	127 x 114.3	.190	8	1/2 x 12-24	1 1/4 x 12
5" x 5"*	127 x 127	.190	8	1/2 x 12-24	1 1/4 x 12

* 5" x 5" TA3750 Only

Approved for NFPA 80 fire rated openings

Options:

Code	Description
NRD	Non-Removable Door – one set screwed hinge furnished per set
RC	Round Corner – 1/4" radius furnished unless specified otherwise
SSF	Safety Stud Feature
MM	Magnetic Monitoring
QC	ElectroLynx® hinge 4 or 8 wire available
CC	Concealed Circuit 4 or 8 wire available
FT	Flat Tip
RT	Round Tip
GT	Grooved Tip
LT	Lined Tip

McKinney is a brand associated with ASSA ABLOY Accessories and Door Controls Group, Inc. Copyright © 2012-2025, ASSA ABLOY Accessories and Door Controls Group, Inc. All rights reserved. Reproduction in whole or in part without the express written permission of ASSA ABLOY Accessories and Door Controls Group, Inc. is prohibited.

McKinney
ASSA ABLOY
Experience a safer and more open world

Three Knuckle Standard Weight Series

The full mortise bearing hinge is recommended for standard weight, medium frequency doors, or doors with closing devices.

- Use for the common flush door/frame/wall application
- Decorative tips are available
- For available finishes see page 28

TA314
TA714

No.	ANSI Cross Reference	Base Material	Weight
TA314	A5112	Stainless	STD
TA314	A2112	Brass	STD
TA714	A8112	Steel	STD

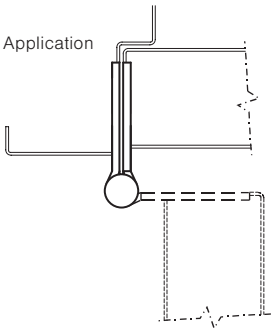

Specifications

Inches	mm	Gauge	No. of Holes	Fasteners Machine	Fasteners Wood
3½" x 3½"*	88.9 x 88.9	.123	6	½ x 10-24	1 x 10
4" x 4"*	101.6 x 101.6	.130	8	½ x 12-24	1¼ x 12
4½" x 4"	114.3 x 101.6	.134	8	½ x 12-24	1¼ x 12
4½" x 4½"	114.3 x 114.3	.134	8	½ x 12-24	1¼ x 12
5" x 4½"*	127 x 114.3	.146	8	½ x 12-24	1¼ x 12
5" x 5"*	127 x 127	.146	8	½ x 12-24	1¼ x 12

* Not available in Brass Base material

Options:

Code	Description
NRP	Non-Removable Pin
RC	Round Corner – ¼" radius furnished unless specified otherwise
HT	Hospital Tip
SSF	Safety Stud Feature
QC	ElectroLynx® Hinge – 4, 8 or 12 wire available
CC	Concealed Circuit – 4, 8 or 12 wire available
CC-18	Concealed Circuit – 2, 4, 6, 8 or 10 wire available (2-18AWG wires and the remainder 28AWG wires)
MM	Magnetic Monitoring

Decorative Tip Options	
FT	Flat Tip
RT	Round Tip
GT	Grooved Tip
LT	Lined Tip
BT	Ball Tip
ST	Steeple Tip
KT	Knurled Tip

Note: Not available on 3½ " x 3½" hinges

Steel & Stainless Approved for NFPA 80 fire rated openings

McKinney
ASSA ABLOY

Experience a safer and more open world

800-346-7707 | www.mckinneyhinge.com
Check the web site for the up-to-date catalog

McKinney is a brand associated with ASSA ABLOY Accessories and Door Controls Group, Inc. Copyright © 2012-2025, ASSA ABLOY Accessories and Door Controls Group, Inc. All rights reserved. Reproduction in whole or in part without the express written permission of ASSA ABLOY Accessories and Door Controls Group, Inc. is prohibited.

Three Knuckle Heavy Weight Series

Recommended for use on high frequency and/or heavy wood or metal doors in schools, hospitals or other public buildings where heavy traffic is experienced.

- Heavy weight hinges should be used on all extra heavy doors or those exposed to high frequency use
- Use for the common flush door/frame/wall application
- Beveled Edge - where doors are beveled on hinge side specify TA5386 or TA5786
- For available finishes see page 28
- Decorative flat tips are available on 4½" and 5"

TA386
TA786

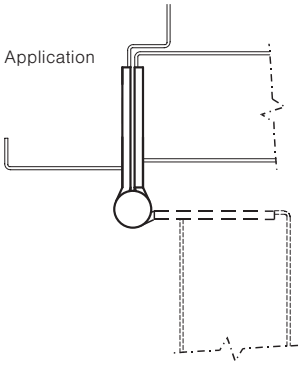

No.	ANSI Cross Reference	Base Material	Weight
TA386	A5111	Stainless	HVY
TA386	A2111	Brass	HVY
TA786	A8111	Steel	HVY

Specifications

Inches	mm	Gauge	No. of Holes	Fasteners Machine	Fasteners Wood
4½" x 4"	114.3 x 101.6	.180	8	½ x 12-24	1¼ x 12
4½" x 4½"	114.3 x 114.3	.180	8	½ x 12-24	1¼ x 12
5" x 4½"	127 x 114.3	.190	8	½ x 12-24	1¼ x 12
5" x 5"*	127 x 127	.190	8	½ x 12-24	1¼ x 12
6" x 5"*	152.4 x 127	.203	10	½ x ¼-20	1½ x 14
6" x 6"*	152.4 x 152.4	.203	10	½ x ¼-20	1½ x 14

* Not available in Brass Base material.

Options:

Code	Description
NRP	Non-Removable Pin
RC	Round Corner – ¼" radius furnished unless specified otherwise
HT	Hospital Tip
SSF	Safety Stud Feature
QC	ElectroLynx® Hinge – 4, 8 or 12 wire available
CC	Concealed Circuit – 4, 8 or 12 wire available
CC-18	Concealed Circuit –2, 4, 6, 8 or 10 wire available (2-18AWG wires and the remainder 28AWG wires)
MM	Magnetic Monitoring
FT	Flat Tip
BT	Ball Tip
RT	Round Tip
GT	Grooved Tip
LT	Lined Tip
KT	Knurled Tip

Steel & Stainless Approved for NFPA 80 fire rated openings

McKinney is a brand associated with ASSA ABLOY Accessories and Door Controls Group, Inc. Copyright © 2012-2025, ASSA ABLOY Accessories and Door Controls Group, Inc. All rights reserved. Reproduction in whole or in part without the express written permission of ASSA ABLOY Accessories and Door Controls Group, Inc. is prohibited.

McKinney
ASSA ABLOY
Experience a safer and more open world

Three Knuckle Hospital Tip Heavy Weight Series

Recommended for use on high frequency and/or heavy wood or metal doors in schools, hospitals or other public buildings where security requirements exist.

- Institutional hinges feature hospital tipped ends and concealed bearing assemblies
- The prison safety feature is available on non-electric hinges
- Heavy weight hinges should be used on all extra heavy doors or those exposed to high frequency use
- Use for the common flush door/frame/wall application
- Beveled Edge - where doors are beveled on hinge side specify HTA5386 or HTA5786
- Torx Pin Head Fasteners Available
- For available finishes see page 28

HTA386

HTA786

Shown with optional prison safety feature (4½ x 4½ size only)

No.	ANSI Cross Reference	Base Material	Weight
HTA386	A5111	Stainless	HVY
HTA786	A8111	Steel	HVY

Application

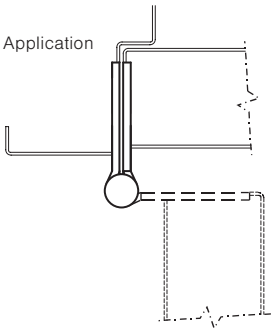

Specifications

Inches	mm	Gauge	No. of Holes	Fasteners Machine	Fasteners Wood
4½" x 4½"	114.3 x 114.3	.180	8	½ x 12-24	1¼ x 12
5" x 4½"*	127 x 114.3	.190	8	½ x 12-24	1¼ x 12

* Not Available with PSF option.

Options:

Code	Description
PSF	Prison Safety Feature
MM	Magnetic Monitoring*
QC	ElectroLynx® Hinge – 4, 8 or 12 wire available. (12 wire not available with PSF)
CC	Concealed Circuit – 4, 8 or 12 wire available. (12 wire not available with PSF)

* Not Available with PSF option.

Approved for NFPA 80 fire rated openings

McKinney ASSA ABLOY

Experience a safer and more open world

800-346-7707 | www.mckinneyhinge.com
Check the web site for the up-to-date catalog

McKinney is a brand associated with ASSA ABLOY Accessories and Door Controls Group, Inc. Copyright © 2012-2025, ASSA ABLOY Accessories and Door Controls Group, Inc. All rights reserved. Reproduction in whole or in part without the express written permission of ASSA ABLOY Accessories and Door Controls Group, Inc. is prohibited.

Three Knuckle Heavy Weight Series (Reversible)

Recommended for use on high frequency and/or heavy wood or metal doors in schools, hospitals or other public buildings where heavy traffic is experienced.

- Hinge allows for maximum clearance for passage of beds, tables or other equipment through doorway
- Pressed steel jambs require no special reinforcing
- Steel base materials
- For Beveled Edge, where doors are beveled on hinge side, specify TA5795
- For available finishes see page 28

TA795

No.	ANSI Cross Reference	Base Material	Weight
TA795	A8121	Steel	HVY

Application

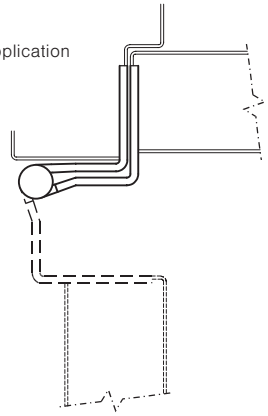

Specifications

Inches	mm	Gauge	No. of Holes	Fasteners Machine	Fasteners Wood
4½"	114.3	.180	8	½ x 12-24	1¼ x 12
5"	127	.190	8	½ x 12-24	1¼ x 12

Note: The pin is held in place by an NRP set screw which allows the hinge to be reversible.

Options:

Code	Description
HT	Hospital Tip

Approved for NFPA 80 fire rated openings

McKinney is a brand associated with ASSA ABLOY Accessories and Door Controls Group, Inc. Copyright © 2012-2025, ASSA ABLOY Accessories and Door Controls Group, Inc. All rights reserved. Reproduction in whole or in part without the express written permission of ASSA ABLOY Accessories and Door Controls Group, Inc. is prohibited.

McKinney
ASSA ABLOY
Experience a safer and more open world

Five Knuckle Standard Weight Series

The full mortise plain bearing hinge is recommended for low frequency doors.

- Use for the common flush door/frame/wall application
- Available on the QuickShip program
- T2314 stainless steel base material – For available finishes see page 28
- T2714 steel base material – For available finishes see page 28
- For Beveled Edge, where doors are beveled on hinge side, specify T4314 or T4714

T2314
T2714

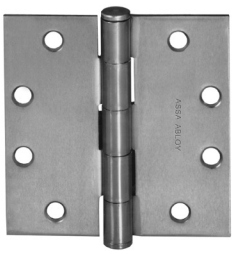

No.	ANSI Cross Reference	Base Material	Weight
T2314	A5133	Stainless	STD
T2714	A8133	Steel	STD

Application

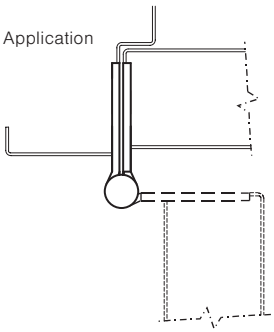

Specifications

Inches	mm	Gauge	No. of Holes	Fasteners	
				Machine	Wood
3 1/2" x 3 1/2"*	88.9 x 88.9	.123	6	1/2 x 10-24	1 x 10
4" x 4"	114.3 x 114.3	.130	8	1/2 x 12-24	1 1/4 x 12
4 1/2" x 4 1/2"	114.3 x 114.3	.134	8	1/2 x 12-24	1 1/4 x 12
5" x 4 1/2"	127 x 114.3	.146	8	1/2 x 12-24	1 1/4 x 12
5" x 5"	127 x 127	.146	8	1/2 x 12-24	1 1/4 x 12

*Available with reverse hole pattern.
Not available in brass base.

Options:

Code	Description
NRP	Non-Removable Pin
RC	Round Corner – 1/4" radius furnished unless specified otherwise
HT	Hospital Tip
BT	Ball Tip
ST	Steeple Tip
SSF	Safety Stud Feature

McKinney Hinge Pin Door Stop

- Recommended for high-use or high impact doors with McKinney T2714 or TA2714 hinges
- Protects against damage to doors and walls
- Runs the full length of the hinge

Part number	Description	Finish
76305	Hinge Pin Stop for MacPro MP79 & MPB79	26D
76306	Hinge Pin Stop for McKinney T2714 & TA2714	26D
76307	Hinge Pin Stop for MacPro MP79 & MPB79	BSP
76308	Hinge Pin Stop for McKinney T2714 & TA2714	BSP

McKinney
ASSA ABLOY
Experience a safer and more open world

800-346-7707 | www.mckinneyhinge.com
Check the web site for the up-to-date catalog

McKinney is a brand associated with ASSA ABLOY Accessories and Door Controls Group, Inc. Copyright © 2012-2025, ASSA ABLOY Accessories and Door Controls Group, Inc. All rights reserved. Reproduction in whole or in part without the express written permission of ASSA ABLOY Accessories and Door Controls Group, Inc. is prohibited.

Five Knuckle Standard Weight Series

Recommended for standard weight, medium frequency doors, or doors with closing devices.

- Use for common flush door/frame/wall applications
- For Beveled Edge, where doors are beveled on hinge side, specify TA4314 or TA4714
- For available finishes see page 28

TA2314
TA2714

No.	ANSI Cross Reference	Base Material	Weight
TA2314	A5112	Stainless	STD
TA2314	A2112	Brass	STD
TA2714	A8112	Steel	STD

Specifications

Inches	mm	Gauge	No. of Holes	Fasteners Machine	Fasteners Wood
3½" x 3½"*	88.9 x 88.9	.123	6	½ x 10-24	1 x 10
4" x 4"*	101.6 x 101.6	.130	8	½ x 12-24	1¼ x 12
4½" x 4"	114.3 x 101.6	.134	8	½ x 12-24	1¼ x 12
4½" x 4½"	114.3 x 114.3	.134	8	½ x 12-24	1¼ x 12
5" x 4½"*	127 x 114.3	.146	8	½ x 12-24	1¼ x 12
5" x 5"*	127 x 127	.146	8	½ x 12-24	1¼ x 12
6" x 6"*	152.4 x 152.4	.160	10	½ x ¼-20	1½ x 14

* Not available in Brass base material.

Application

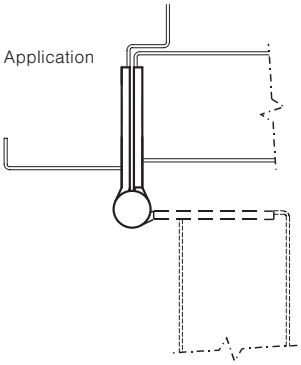

Options:

Code	Description
NRP	Non-Removable Pin
TB	Ball Bearing
TCA	Concealed Bearing
RC	Round Corner – ¼" radius furnished unless specified otherwise
HT	Hospital Tip
BT	Ball Tip
FT	Flat Tip*

*Not available on 3-1/2" and 6" sizes

Code	Description
GT	Grooved Tip*
LT	Lined Tip*
RT	Round Tip*
ST	Steeple Tip
KT	Knurled Tip
SSF	Safety Stud Feature
CC-18	Concealed Circuit – 2, 4, 6, 8 or 10 wire available (2-18AWG wires and the remainder 28AWG wires)

Code	Description
MM	Magnetic Monitoring
QC	ElectroLynx® Hinge – 4, 8 or 12 wire available
CC	Concealed Circuit – 4, 8 or 12 wire available

Steel & Stainless Approved for NFPA 80 fire rated openings

McKinney Hinge Pin Door Stop

- Recommended for high-use or high impact doors with McKinney T2714 or TA2714 hinges
- Protects against damage to doors and walls
- Runs the full length of the hinge

Part number	Description	Finish
76305	Hinge Pin Stop for MacPro MP79 & MPB79	26D
76306	Hinge Pin Stop for McKinney T2714 & TA2714	26D
76307	Hinge Pin Stop for MacPro MP79 & MPB79	BSP
76308	Hinge Pin Stop for McKinney T2714 & TA2714	BSP

800-346-7707 | www.mckinneyhinge.com
Check the web site for the up-to-date catalog

McKinney
ASSA ABLOY
Experience a safer and more open world

McKinney is a brand associated with ASSA ABLOY Accessories and Door Controls Group, Inc. Copyright © 2012-2025, ASSA ABLOY Accessories and Door Controls Group, Inc. All rights reserved. Reproduction in whole or in part without the express written permission of ASSA ABLOY Accessories and Door Controls Group, Inc. is prohibited.

Five Knuckle Standard Weight Series

Recommended for standard weight, medium frequency doors, or doors with closing devices.

- Concealed Bearing
- Use for common flush door/frame/wall applications
- For Beveled Edge, where doors are beveled on hinge side, specify TCA4314 or TCA4714
- For available finishes see page 28

TCA2314
TCA2714

No.	ANSI Cross Reference	Base Material	Weight
TCA2314	A5112	Stainless	STD
TCA2714	A8112	Steel	STD

Application

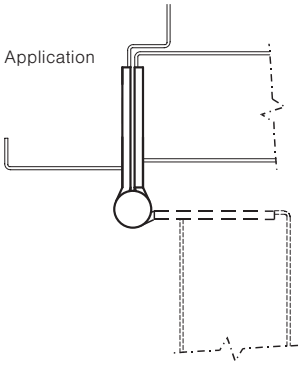

Specifications

Inches	mm	Gauge	No. of Holes	Fasteners Machine	Fasteners Wood
4 1/2" x 4"*	114.3 x 101.6	.134	8	1/2 x 12-24	1 1/4 x 12
4 1/2" x 4 1/2"*	114.3 x 114.3	.134	8	1/2 x 12-24	1 1/4 x 12
5" x 4 1/2"*	127 x 114.3	.146	8	1/2 x 12-24	1 1/4 x 12
5" x 5"*	127 x 127	.146	8	1/2 x 12-24	1 1/4 x 12

* Not available in Brass base material.

Options:

Code	Description
NRP	Non-Removable Pin
RC	Round Corner – 1/4" radius furnished unless specified otherwise
HT	Hospital Tip
BT	Ball Tip
ST	Steeple Tip
SSF	Safety Stud Feature
QC	ElectroLynx® Hinge – 4, 8 or 12 wire available
CC	Concealed Circuit – 4, 8 or 12 wire available
CC-18	Concealed Circuit – 2, 4, 6, 8 or 10 wire available (2-18AWG wires and the remainder 28AWG wires)
MM	Magnetic Monitoring

Approved for NFPA 80 fire rated openings

McKinney is a brand associated with ASSA ABLOY Accessories and Door Controls Group, Inc. Copyright © 2012-2025, ASSA ABLOY Accessories and Door Controls Group, Inc. All rights reserved. Reproduction in whole or in part without the express written permission of ASSA ABLOY Accessories and Door Controls Group, Inc. is prohibited.

Five Knuckle Standard Weight Series

Wide throw hinges are utilized where a door is recessed from the face of the frame.

- The wide throw full mortise bearing hinge is recommended for use on standard weight, medium frequency doors where it is necessary to open the door around a large reveal
- For information on calculating the proper width of a wide throw hinge see page 16
- For Beveled Edge, where doors are beveled on hinge side, specify TA4398 or TA4798
- For available finishes see page 28

TA2398
TA2798

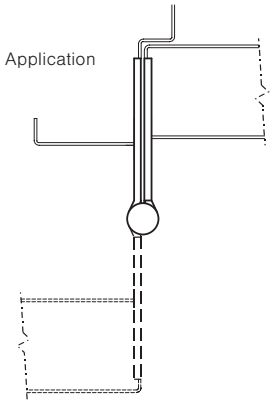

No.	ANSI Cross Reference	Base Material	Weight
TA2398	A5112	Stainless	STD
TA2798	A8112	Steel	STD

Specifications

Inches	mm	Gauge	No. of Holes	Fasteners Machine	Fasteners Wood
3 1/2" x 5"	88.9 x 127	.123	6	1/2 x 10-24	1 x 10
3 1/2" x 6"	88.9 x 152.4	.123	6	1/2 x 10-24	1 x 10
4" x 6"	101.6 x 152.4	.130	8	1/2 x 12-24	1 1/4 x 12
4 1/2" x 5"	114.3 x 127	.134	8	1/2 x 12-24	1 1/4 x 12
4 1/2" x 6"	114.3 x 152.4	.134	8	1/2 x 12-24	1 1/4 x 12
4 1/2" x 7"	114.3 x 177.8	.134	8	1/2 x 12-24	1 1/4 x 12
4 1/2" x 8"	114.3 x 203.2	.134	8	1/2 x 12-24	1 1/4 x 12
5" x 7"	127 x 177.8	.146	8	1/2 x 12-24	1 1/4 x 12

Approved for NFPA 80 fire rated openings

Options:

Code	Description
NRP	Non-Removable Pin
TB	Ball Bearing
TCA	Concealed Bearing
RC	Round Corner – 1/4" radius furnished unless specified otherwise
HT	Hospital Tip
BT	Ball Tip
ST	Steeple Tip
SSF	Safety Stud Feature
QC	ElectroLynx® Hinge – 4, 8 or 12 wire available*
CC	Concealed Circuit – 4, 8 or 12 wire available*
CC-18	Concealed Circuit – 2, 4, 6, 8 or 10 wire available (2-18AWG wires and the remainder 28AWG wires)*
MM	Magnetic Monitoring

* Maximum 6" width.

McKinney is a brand associated with ASSA ABLOY Accessories and Door Controls Group, Inc. Copyright © 2012-2025, ASSA ABLOY Accessories and Door Controls Group, Inc. All rights reserved. Reproduction in whole or in part without the express written permission of ASSA ABLOY Accessories and Door Controls Group, Inc. is prohibited.

McKinney
ASSA ABLOY
Experience a safer and more open world

Five Knuckle Heavy Weight Full Mortise Series

Recommended for use on high frequency and/or heavy wood or metal doors in schools, hospitals or other public buildings where heavy traffic is experienced.

- Heavy weight hinges should be used on all extra heavy doors or those exposed to high frequency use
- T4A3386- Stainless steel base or available in brass base material polished
- T4A3786- Steel base material
- For Beveled Edge, where doors are beveled on hinge side, specify T4A4386 or T4A4786
- For available finishes see page [28]

Note: The 8" x 6" has six bearings. Specify T6B3786.

T4A3386
T4A3786

Application

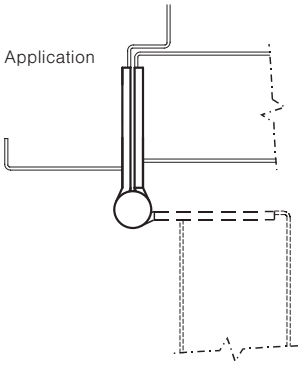

No.	ANSI Cross Reference	Base Material	Weight
T4A3386	A5111	Stainless	HVY
T4A3386	A2111	Brass	HVY
T4A3786	A8111	Steel	HVY

Specifications

Inches	mm	Gauge	No. of Holes	Fasteners Machine	Fasteners Wood
4 1/2" x 4"	114.3 x 101.6	.180	8	1/2 x 12-24	1 1/4 x 12
4 1/2" x 4 1/2"	114.3 x 114.3	.180	8	1/2 x 12-24	1 1/4 x 12
5" x 4 1/2"	127 x 114.3	.190	8	1/2 x 12-24	1 1/4 x 12
5" x 5"*	127 x 127	.190	8	1/2 x 12-24	1 1/4 x 12
6" x 5"*	152.4 x 127	.203	10	1/2 x 1/4-20	1 1/2 x 14
6" x 6"*	152.4 x 152.4	.203	10	1/2 x 1/4-20	1 1/2 x 14
8" x 6"**	203.2 x 125.4	.203	16	1/2 x 1/4-20	1 1/2 x 14

* Not available in brass base material.
** Available in steel only.
***FT tips not offered on 6" and 8" sizes, BT and ST not offered on 8" sizes.

Options:

Code	Description
NRP	Non-Removable Pin
T4B	Ball Bearing
TCA	Concealed Bearing
RC	Round Corner – 1/4" radius furnished unless specified otherwise
HT	Hospital Tip
BT* **	Ball Tip
FT * **	Flat Tip
ST* **	Steeple Tip
KT	Knurled Tip
SSF	Safety Stud Feature
RB	Raised Barrel*
QC	ElectroLynx® Hinge – 4, 8 or 12 wire available
CC	Concealed Circuit – 4, 8 or 12 wire available
CC-18	Concealed Circuit – 2, 4, 6, 8 or 10 wire available (2-18AWG wires and the remainder 28AWG wires)
MM	Magnetic Monitoring

Steel & Stainless Approved for NFPA 80 fire rated openings

* Refer to page SP-3 for Raised Barrel.

McKinney
ASSA ABLOY
Experience a safer and more open world

800-346-7707 | www.mckinneyhinge.com
Check the web site for the up-to-date catalog

McKinney is a brand associated with ASSA ABLOY Accessories and Door Controls Group, Inc. Copyright © 2012-2025, ASSA ABLOY Accessories and Door Controls Group, Inc. All rights reserved. Reproduction in whole or in part without the express written permission of ASSA ABLOY Accessories and Door Controls Group, Inc. is prohibited.

Five Knuckle Heavy Weight Full Mortise Series

Recommended for use on high frequency and/or heavy wood or metal doors in schools, hospitals or other public buildings where heavy traffic is experienced.

Concealed Bearing

- Heavy weight hinges should be used on all extra heavy doors or those exposed to high frequency use
- TCA3386 – Stainless steel base
- TCA3786 – Steel base material
- For Beveled Edge, where doors are beveled on hinge side, specify TCA4386 or TCA4786
- For available finishes see page 28

TCA3386
TCA3786

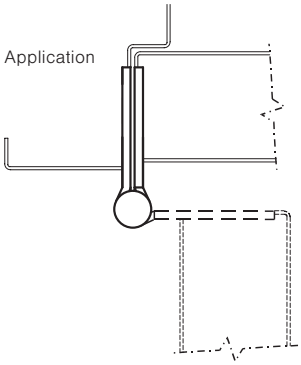

No.	ANSI Cross Reference	Base Material	Weight
TCA3386	A5111	Stainless	HVY
TCA3786	A8111	Steel	HVY

Specifications

Inches	mm	Gauge	No. of Holes	Fasteners Machine	Fasteners Wood
4 1/2" x 4"*	114.3 x 101.6	.180	8	1/2 x 12-24	1 1/4 x 12
4 1/2" x 4 1/2"*	114.3 x 114.3	.180	8	1/2 x 12-24	1 1/4 x 12
5" x 4 1/2"*	127 x 114.3	.190	8	1/2 x 12-24	1 1/4 x 12
5" x 5"*	127 x 127	.190	8	1/2 x 12-24	1 1/4 x 12

* Not available in brass base material.

Approved for NFPA 80 fire rated openings

Options:

Code	Description
NRP	Non-Removable Pin
RC	Round Corner – 1/4" radius furnished unless specified otherwise
HT	Hospital Tip
BT	Ball Tip
ST	Steeple Tip
SSF	Safety Stud Feature
QC	ElectroLynx® Hinge – 4, 8 or 12 wire available
CC	Concealed Circuit – 4, 8 or 12 wire available
CC-18	Concealed Circuit – 2, 4, 6, 8 or 10 wire available (2-18AWG wires and the remainder 28AWG wires)
MM	Magnetic Monitoring

McKinney is a brand associated with ASSA ABLOY Accessories and Door Controls Group, Inc. Copyright © 2012-2025, ASSA ABLOY Accessories and Door Controls Group, Inc. All rights reserved. Reproduction in whole or in part without the express written permission of ASSA ABLOY Accessories and Door Controls Group, Inc. is prohibited.

McKinney
ASSA ABLOY
Experience a safer and more open world

Five Knuckle Heavy Weight Wide Throw Series

Recommended for use on high frequency and/or heavy wood or metal doors in schools, hospitals or other public buildings where heavy traffic is experienced and it is necessary to open the door around a large reveal.

T4A3386

T4A3786

- Heavy weight hinges should be used on all extra heavy doors or those exposed to high frequency use
- T4A3386 – Stainless steel base
- T4A3786 – Steel base material
- For Beveled Edge, where doors are beveled on hinge side, specify T4A4386 or TA4786
- For available finishes see page 28

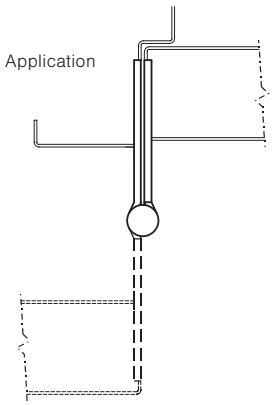

No.	ANSI Cross Reference	Base Material	Weight
T4A3386	A5111	Stainless	HVY
T4A3786	A8111	Steel	HVY

Specifications

Inches	mm	Gauge	No. of Holes	Fasteners	
				Machine	Wood
4½" x 5"	114.3 x 127	.180	8	½ x 12-24	1¼ x 12
4½" x 6"	114.3 x 152.4	.180	6	½ x 10-24	1¼ x 12
4½" x 7"	114.3 x 177.8	.180	8	½ x 12-24	1¼ x 12
4½" x 8"	114.3 x 203.2	.180	8	½ x 12-24	1¼ x 12
5" x 6"	127 x 152.4	.190	8	½ x 12-24	1¼ x 12
5" x 7"	127 X 177.8	.190	8	½ x 12-24	1¼ x 12
5" x 8"	127 X 203.2	.190	8	½ x 12-24	1¼ x 12

Approved for NFPA 80 fire rated openings

Options:

Code	Description
NRP	Non-Removable Pin
T4B	Ball Bearing
TCA	Concealed Bearing
RC	Round Corner – ¼" radius furnished unless specified otherwise
HT	Hospital Tip
BT	Ball Tip
ST	Steeple Tip
SSF	Safety Stud Feature
QC	ElectroLynx® Hinge – 4, 8 or 12 wire available*
CC	Concealed Circuit – 4, 8 or 12 wire available*
MM	Magnetic Monitoring

* QC and CC options available on hinges up to 6" wide.

McKinney is a brand associated with ASSA ABLOY Accessories and Door Controls Group, Inc. Copyright © 2012-2025, ASSA ABLOY Accessories and Door Controls Group, Inc. All rights reserved. Reproduction in whole or in part without the express written permission of ASSA ABLOY Accessories and Door Controls Group, Inc. is prohibited.

Five Knuckle Standard Weight Swing Clear Series (Reversible)

Swing Clear Hinges create barrier free openings by moving the hinge barrel and door edge out of the way.

- Recommended for use on standard weight, medium frequency doors in schools, hospitals or other public buildings
- Hinge allows for maximum clearance for passage of beds, tables or other equipment through the doorway
- Meets ADA Requirements and ANSI A117.1-1986
- Pressed steel jambs require no special reinforcing
- Pin is held in place by an NRP set screw, which allows the hinge to be reversible
- For Beveled Edge, where doors are beveled on hinge side, specify TA4895 or TA4395
- For available finishes see page 28

TA2395
TA2895

Application

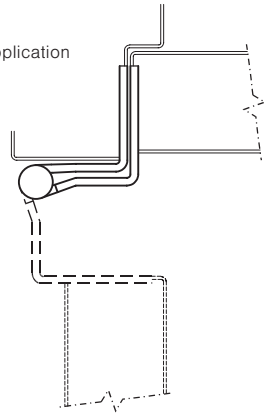

No.	ANSI Cross Reference	Base Material	Weight
TA2395	N/A	Stainless	STD
TA2895	A8122	Steel	STD

Specifications

Inches	mm	Gauge	No. of Holes	Fasteners Machine	Fasteners Wood
4 1/2"	114.3	.134	8	1/2 x 12-24	1 1/4 x 12
5"*	127	.146	8	1/2 x 12-24	1 1/2 x 12

*Not Available with electric options

Approved for NFPA 80 fire rated openings

Options:

Code	Description
TB	Ball Bearing
HT	Hospital Tip
QC	ElectroLynx® Hinge – 4, 8 or 12 wire available in 4-1/2" US26D and US32D only
CC	Concealed Circuit – 4, 8 or 12 wire available in 4-1/2" US26D and US32D only

McKinney is a brand associated with ASSA ABLOY Accessories and Door Controls Group, Inc. Copyright © 2012-2025, ASSA ABLOY Accessories and Door Controls Group, Inc. All rights reserved. Reproduction in whole or in part without the express written permission of ASSA ABLOY Accessories and Door Controls Group, Inc. is prohibited.

McKinney
ASSA ABLOY
Experience a safer and more open world

Five Knuckle Heavy Weight Swing Clear Series (Reversible)

Swing Clear Hinges create barrier free openings by moving the hinge barrel and door edge out of the way.

- Recommended for use on high frequency and/or heavy wood or metal doors in schools, hospitals or other public buildings where heavy traffic is experienced
- Hinge allows for maximum clearance for passage of beds, tables or other equipment through the doorway
- Meets ADA Requirements and ANSI A117.1-1986
- Pressed steel jambs require no special reinforcing
- Pin is held in place by an NRP set screw, which allows the hinge to be reversible
- For Beveled Edge, where doors are beveled in hinge side, specify T4A4395 or T4A4795
- For available finishes see page 28

T4A3395
T4A3795

Application

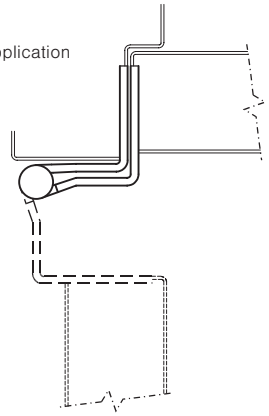

Approved for NFPA 80 fire rated openings

McKinney
ASSA ABLOY
Experience a safer and more open world

800-346-7707 | www.mckinneyhinge.com
Check the web site for the up-to-date catalog

McKinney is a brand associated with ASSA ABLOY Accessories and Door Controls Group, Inc. Copyright © 2012-2025, ASSA ABLOY Accessories and Door Controls Group, Inc. All rights reserved. Reproduction in whole or in part without the express written permission of ASSA ABLOY Accessories and Door Controls Group, Inc. is prohibited.

MacPro® Five Knuckle Standard Weight Series

The MacPro line offers contractor grade hinges to get the job done right. High quality MacPro hinges are an extraordinary value, ideal when you need large quantities of standard hinges.

- Plain bearing hinges are for standard weight doors only
- For standard weight doors with a closing device, MPB79 or MPB91 bearing hinge must be used
- MacPro templated hinges are made to conform to ANSI/BHMA 156.1, 156.7
- For available finishes consult the factory

MP79
MP91

MPB79
MPB91

No.	ANSI Cross Reference	Base Material	Weight	Bearing
MP79	A8133	Steel	STD	Plain Bearing
MP91	5133	Stainless*	STD	Plain
MPB79	A8112	Steel	STD	Bearing
MPB91	A5112	Stainless	STD	Bearing

*4½" x 4½"

Application

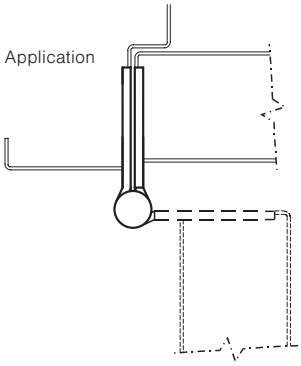

Specifications

Inches	mm	Gauge	No. of Holes	Fasteners Machine	Fasteners Wood
4½" x 4"	114.3 x 101.6	.134	8	½ x 12-24	1¼ x 12
4½" x 4½"	114.3 x 114.3	.134	8	½ x 12-24	1¼ x 12

Approved for NFPA 80 fire rated openings

Options:

Code	Description
NRP*	Non-Removable Pin

*4½ x 4½ MP91 32D NRP only
4½ x 4 MPB91 32D NRP only

McKinney Hinge Pin Door Stop

- Recommended for high-use or high impact doors with MacPro MP79 & MPB79 hinges
- Protects against damage to doors and walls
- Runs the full length of the hinge

Part number	Description	Finish
76305	Hinge Pin Stop for MacPro MP79 & MPB79	26D
76306	Hinge Pin Stop for McKinney T2714 & TA2714	26D
76307	Hinge Pin Stop for MacPro MP79 & MPB79	BSP
76308	Hinge Pin Stop for McKinney T2714 & TA2714	BSP

800-346-7707 | www.mckinneyhinge.com
Check the web site for the up-to-date catalog

McKinney is a brand associated with ASSA ABLOY Accessories and Door Controls Group, Inc. Copyright © 2012-2025, ASSA ABLOY Accessories and Door Controls Group, Inc. All rights reserved. Reproduction in whole or in part without the express written permission of ASSA ABLOY Accessories and Door Controls Group, Inc. is prohibited.

McKinney
ASSA ABLOY
Experience a safer and more open world

MacPro® Five Knuckle Heavy Weight Series

The MacPro® line offers contractor grade hinges to get the job done right. High quality heavy weight hinges are an extraordinary value, ideal when you need large quantities of standard hinges.

- For doors with a closing device, bearing hinge must be used
- For heavy weight doors with a closing device, select a MPB68, heavy weight bearing hinge
- MacPro templated hinges are made to conform to ANSI/BHMA 156.1, 156.7
- For available finishes consult the factory

MPB99
MPB68

Application

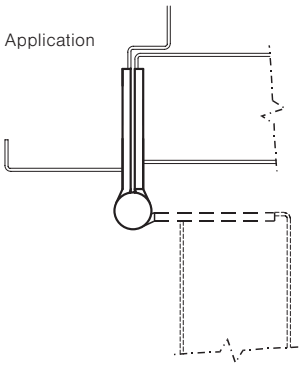

No.	ANSI Cross Reference	Base Material	Weight	Bearing
MPB99	A5111	Stainless	HVY	Bearing
MPB68	A8111	Steel	HVY	Bearing

Specifications

Inches	mm	Gauge	No. of Holes	Fasteners Machine	Fasteners Wood
4 1/2" x 4 1/2"	114.3 x 114.3	.180	8	1/2 x 12-24	1 1/4 x 12
5" x 4 1/2"	127 x 114.3	.190	8	1/2 x 12-24	1 1/4 x 12

Options:

Code	Description
NRP	Non-Removable Pin

Approved for NFPA 80 fire rated openings

McKinney
ASSA ABLOY
Experience a safer and more open world

800-346-7707 | www.mckinneyhinge.com
Check the web site for the up-to-date catalog

McKinney is a brand associated with ASSA ABLOY Accessories and Door Controls Group, Inc. Copyright © 2012-2025, ASSA ABLOY Accessories and Door Controls Group, Inc. All rights reserved. Reproduction in whole or in part without the express written permission of ASSA ABLOY Accessories and Door Controls Group, Inc. is prohibited.

Three Knuckle Heavy Weight Anchor Hinges Series – Concealed Door Closers

Anchor hinge sets are used on doors where high traffic, abuse, or other door hardware place an unusual strain on the door, jamb, and hinges.

- Recommended for use on high frequency and/or heavy wood or metal doors in schools, hospitals or other public buildings where heavy traffic is experienced
- For use with concealed door holders or door closers
- Set includes one anchor hinge and two 5" x 4½" full mortise hinges
- Sets require handing and are packed with all machine and all wood screws
- The pin is inserted from the bottom of the barrel on the anchor hinge, and is held in place by an NRP set screw
- Anchor plate for door header only, permits use of holders and closers concealed in the top of the jamb
- For Beveled Edge, where doors are beveled in hinge side, specify TA5391 or TA5791
- TA391 available in 32D
- TA791 available in 26D

TA391
TA791

Application

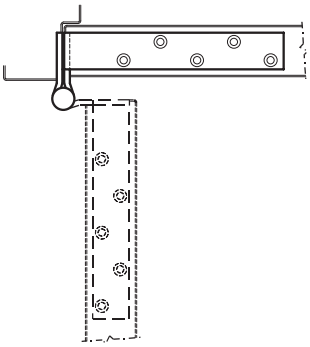

No.	ANSI Cross Reference	Base Material	Weight
TA391	A5551	Stainless	HVY
TA791	A8551	Steel	HVY

Specifications

Inches	mm	Gauge	No. of Holes	Fasteners Machine	Fasteners Wood
5" x 4½"	127 x 114.3	.190	13	½ x 12-24	1¼ x 12

Approved for NFPA 80 fire rated openings

For electrification, a fourth hinge is required. Please see the electrified hinges and order separately. QuickConnect (QC), Concealed Circuit (CC), and Magnetic Monitoring (MM) options are available.

800-346-7707 | www.mckinneyhinge.com
Check the web site for the up-to-date catalog

McKinney is a brand associated with ASSA ABLOY Accessories and Door Controls Group, Inc. Copyright © 2012-2025, ASSA ABLOY Accessories and Door Controls Group, Inc. All rights reserved. Reproduction in whole or in part without the express written permission of ASSA ABLOY Accessories and Door Controls Group, Inc. is prohibited.

McKinney
ASSA ABLOY
Experience a safer and more open world

Three Knuckle Heavy Weight Anchor Hinge Series – Surface Applied Door Closers

Anchor hinge sets are used on doors where high traffic, abuse, or other door hardware place an unusual strain on the door, jamb, and hinges.

- Recommended for use on high frequency and/or heavy wood or metal doors in schools, hospitals or other public buildings where heavy traffic is experienced
- Anchor plate for jamb and door header permits use of surface applied holders and closers
- Set includes one anchor hinge and two 5" x 4½" full mortise hinges. One mortise hinge can be electrified
- Sets require handing and are packed with all machine and all wood screws
- The pin is inserted from the bottom of the barrel on the anchor hinge, and is held in place by an NRP set screw
- For Beveled Edge, where doors are beveled in hinge side, specify TA5392 or TA5792
- TA392 available in 32D
- TA792 available in 26D

TA392

TA792

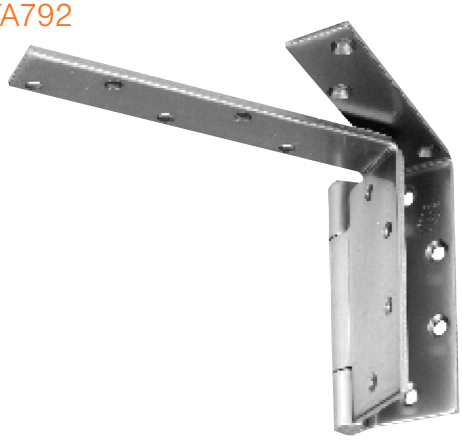

Application

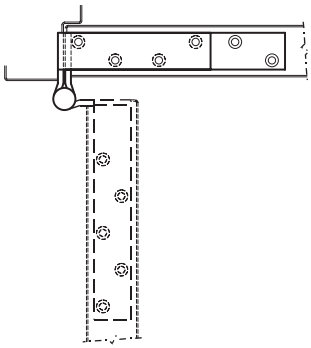

No.	ANSI Cross Reference	Base Material	Weight
TA392	A5551	Stainless	HVY
TA792	A8551	Steel	HVY

Specifications

Inches	mm	Gauge	No. of Holes	Fasteners Machine	Fasteners Wood
5" x 4½"	127 x 114.3	.190	17	½ x 12-24	1¼ x 12

Approved for NFPA 80 fire rated openings

For electrification, a fourth hinge is required. Please see the electrified hinges and order separately. QuickConnect (QC), Concealed Circuit (CC), and Magnetic Monitoring (MM) options are available.

McKinney ASSA ABLOY

Experience a safer and more open world

800-346-7707 | www.mckinneyhinge.com

Check the web site for the up-to-date catalog

McKinney is a brand associated with ASSA ABLOY Accessories and Door Controls Group, Inc. Copyright © 2012-2025, ASSA ABLOY Accessories and Door Controls Group, Inc. All rights reserved. Reproduction in whole or in part without the express written permission of ASSA ABLOY Accessories and Door Controls Group, Inc. is prohibited.

Three Knuckle Heavy Weight Anchor Hinge Series – Concealed Door Closers

Anchor hinge sets are used on doors where high traffic, abuse, or other door hardware place an unusual strain on the door, jamb, and hinges.

- Recommended for use on high frequency and/or heavy wood or metal doors in schools, hospitals or other public buildings where heavy traffic is experienced
- For use with concealed door holders or door closers
- Set includes one anchor hinge and two 5" x 4½" full mortise hinges
- Sets require handing and are packed with all machine and all wood screws
- The pin is inserted from the bottom of the barrel on the anchor hinge, and is held in place by an NRP set screw
- Anchor plate for jamb header only, permits use of holders and closers concealed in the top of the door
- For Beveled Edge, where doors are beveled in hinge side, specify TA5393
- TA393 available in 32D

TA393

Application

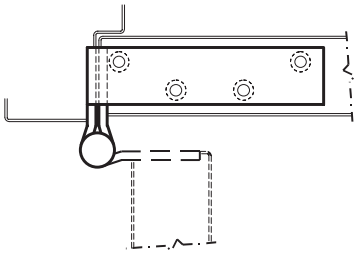

No.	ANSI Cross Reference	Base Material	Weight
TA393	A5551	Stainless	HVY

Specifications

Inches	mm	Gauge	No. of Holes	Fasteners Machine	Fasteners Wood
5" x 4½"	127 x 114.3	.190	12	½ x 12-24	1¼ x 12

Approved for NFPA 80 fire rated openings

For electrification, a fourth hinge is required. Please see the electrified hinges and order separately. QuickConnect (QC), Concealed Circuit (CC), and Magnetic Monitoring (MM) options are available.

McKinney is a brand associated with ASSA ABLOY Accessories and Door Controls Group, Inc. Copyright © 2012-2025, ASSA ABLOY Accessories and Door Controls Group, Inc. All rights reserved. Reproduction in whole or in part without the express written permission of ASSA ABLOY Accessories and Door Controls Group, Inc. is prohibited.

McKinney
ASSA ABLOY
Experience a safer and more open world

Three Knuckle Heavy Weight Anchor Hinge Series – With 4" Door Leg

Anchor hinge sets are used on doors where high traffic, abuse, or other door hardware place an unusual strain on the door, jamb, and hinges.

- Recommended for use on high frequency and/or heavy wood or metal doors in schools, hospitals or other public buildings where heavy traffic is experienced
- Set includes one anchor hinge and two 5" x 4½" full mortise hinges
- Sets require handing and are packed with all machine and all wood screws
- The pin is inserted from the bottom of the barrel on the anchor hinge, and is held in place by an NRP set screw
- Anchor plate for jamb and door header permits use of surface applied holders and closers
- For Beveled Edge, where doors are beveled in hinge side, specify TA5394 or TA5794
- TA394 available in 32D
- TA794 available in 26D

TA394
TA794

Application

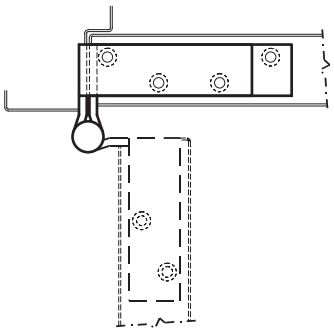

No.	ANSI Cross Reference	Base Material	Weight
TA394	A5551	Stainless	HVY
TA794	A8551	Steel	HVY

Specifications

Inches	mm	Gauge	No. of Holes	Fasteners Machine	Fasteners Wood
5" x 4½"	127 x 114.3	.190	14	½ x 12-24	1¼ x 12

For electrification, a fourth hinge is required. Please see the electrified hinges and order separately. QuickConnect (QC), Concealed Circuit (CC), and Magnetic Monitoring (MM) options are available.

Approved for NFPA 80 fire rated openings

McKinney
ASSA ABLOY
Experience a safer and more open world

800-346-7707 | www.mckinneyhinge.com
Check the web site for the up-to-date catalog

McKinney is a brand associated with ASSA ABLOY Accessories and Door Controls Group, Inc. Copyright © 2012-2025, ASSA ABLOY Accessories and Door Controls Group, Inc. All rights reserved. Reproduction in whole or in part without the express written permission of ASSA ABLOY Accessories and Door Controls Group, Inc. is prohibited.

Five Knuckle Standard Weight Half Mortise Series (Reversible)

Half Mortise Bearing Hinges are for greater frequency and weight than the Plain Bearing hinges.

- Recommended for use on average frequency and/or medium weight wood or metal doors in schools, hospitals or other public buildings where medium traffic is experienced
- The hinges may be used on channel iron jambs
- The jamb leaf is applied to the surface of the jamb with machine screws. The door leaf is mortised into the edge of the door
- The pin is held in place by an NRP set screw, which allows the hinge to be reversible
- For Beveled Edge, where doors are beveled in hinge side, specify TA4374 or TA4774
- For TA2774 available finishes see page 29
- TA3374 available in 32D

TA3374
TA2774

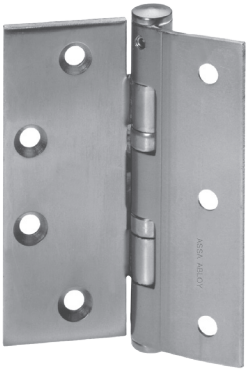

Application

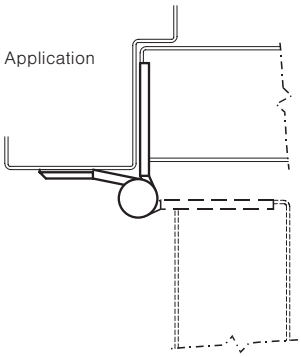

No.	ANSI Cross Reference	Base Material	Weight
TA3374	A522	Stainless	STD
TA2774	A822	Steel	STD

Specifications

Inches	mm	Gauge	No. of Holes	Fasteners Machine
4½"	114.3	.134	7	½ x 12-24
5"	127.0	.146	8	½ x 12-24

Options:

Code	Description
TB	Ball Bearing
HT	Hospital Tip

Approved for NFPA 80 fire rated openings

McKinney is a brand associated with ASSA ABLOY Accessories and Door Controls Group, Inc. Copyright © 2012-2025, ASSA ABLOY Accessories and Door Controls Group, Inc. All rights reserved. Reproduction in whole or in part without the express written permission of ASSA ABLOY Accessories and Door Controls Group, Inc. is prohibited.

McKinney
ASSA ABLOY
Experience a safer and more open world

Five Knuckle Heavy Weight Half Mortise Series (Reversible)

Half Mortise Bearing Heavy Weight Hinges are for greater frequency and weight than Plain Bearing or standard hinges.

- Recommended for use on high frequency and/or heavy wood or metal doors in schools, hospitals or other public buildings where heavy traffic is experienced
- The hinges may be used on channel iron jambs
- The jamb leaf is applied to the surface of the jamb with machine screws. The door leaf is mortised into the edge of the door
- The pin is held in place by an NRP set screw, which allows the hinge to be reversible
- For Beveled Edge, where doors are beveled in hinge side, specify T4A4784
- T4A3384 available in 32D, T4A3784 available in P and 26D

T4A3784

No.	ANSI Cross Reference	Base Material	Weight
T4A3784	A8211	Steel	HVY

Application

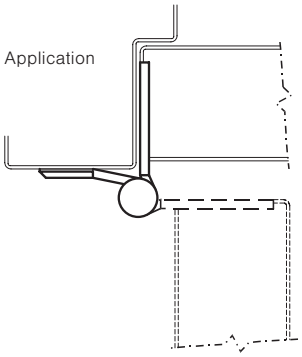

Specifications

Inches	mm	Gauge	No. of Holes	Fasteners Machine
4 1/2"	114.3	.180	7	1/2 x 12-24
5"	127.0	.190	8	1/2 x 12-24

Options:

Code	Description
T4B	Ball Bearing
HT	Hospital Tip

Approved for NFPA 80 fire rated openings

McKinney ASSA ABLOY

Experience a safer and more open world

800-346-7707 | www.mckinneyhinge.com

Check the web site for the up-to-date catalog

McKinney is a brand associated with ASSA ABLOY Accessories and Door Controls Group, Inc. Copyright © 2012-2025, ASSA ABLOY Accessories and Door Controls Group, Inc. All rights reserved. Reproduction in whole or in part without the express written permission of ASSA ABLOY Accessories and Door Controls Group, Inc. is prohibited.

Five Knuckle Heavy Weight Swing Clear Half Mortise Series (Reversible)

The swing of these hinges allows maximum clearance for passage of beds, tables or other equipment through door openings.

- Recommended for use on high frequency and/or heavy wood or metal doors in schools, hospitals or other public buildings where heavy traffic is experienced
- The hinges may be used on channel iron jambs
- The jamb leaf is applied to the surface of the jamb with machine screws. The door leaf is mortised into the edge of the door
- The pin is held in place by an NRP set screw, which allows the hinge to be reversible
- For Beveled Edge, where doors are beveled in hinge side, specify T4A4789
- Available in 26D

T4A3789

No.	ANSI Cross Reference	Base Material	Weight
T4A3789	A8221	Steel	HVY

Application

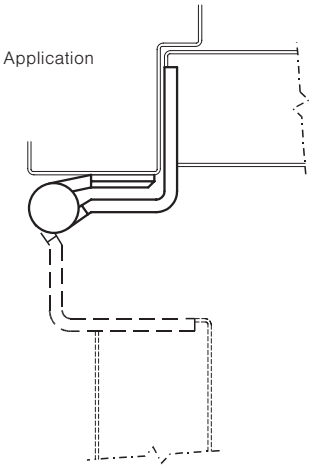

Specifications

Inches	mm	Gauge	No. of Holes	Fasteners: Jamb Machine	Fasteners: Door Machine	Fasteners: Door Wood
5"	127.0	.190	8	1/2 x 1/4-20	1/2 x 12-24	1 1/4 x 12

Options:

Code	Description
T4B	Ball Bearing
HT	Hospital Tip

Approved for NFPA 80 fire rated openings

McKinney is a brand associated with ASSA ABLOY Accessories and Door Controls Group, Inc. Copyright © 2012-2025, ASSA ABLOY Accessories and Door Controls Group, Inc. All rights reserved. Reproduction in whole or in part without the express written permission of ASSA ABLOY Accessories and Door Controls Group, Inc. is prohibited.

McKinney
ASSA ABLOY
Experience a safer and more open world

Five Knuckle Standard Weight Series (Reversible)

Recommended for use on average frequency and/or medium weight wood or metal doors in schools, hospitals or other public buildings where medium traffic is experienced.

TA2772
TA2372

- Standard weight half surface hinges are packed with all machine screws and thru bolts and grommet nuts
- The jamb leaf is fastened into the mortise with machine screws. The door leaf is applied full surface with thru bolts and grommet nuts
- The pin is held in place by an NRP set screw, which allows the hinge to be reversible
- Specify if the door thickness is greater than 1 3/4" to ensure that proper bolt is packed
- For available finishes see page 28

No.	ANSI Cross Reference	Base Material	Weight
TA2772	A8412	Steel	STD
TA2372	A8412	Stainless Steel	STD

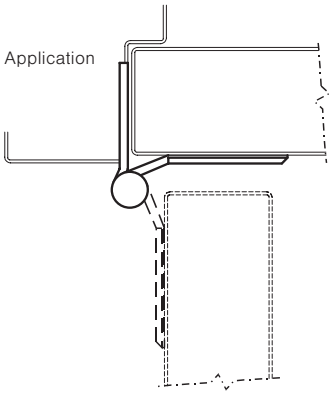

Specifications

Inches	mm	Gauge	No. of Holes	Fasteners: Jamb Machine	Fasteners: Door Machine
4 1/2"	114.3	.134	7	1/2 x 12-24	2 x 1/4-20
5"	127.0	.146	8	1/2 x 12-24	2 x 1/4-20

Options:

Code	Description
BP-10	Back Plate*
TB	Ball Bearing
HT	Hospital Tips

* Refer to page HS-8 for BP-10.

Approved for NFPA 80 fire rated openings

McKinney
ASSA ABLOY
Experience a safer and more open world

800-346-7707 | www.mckinneyhinge.com
Check the web site for the up-to-date catalog

McKinney is a brand associated with ASSA ABLOY Accessories and Door Controls Group, Inc. Copyright © 2012-2025, ASSA ABLOY Accessories and Door Controls Group, Inc. All rights reserved. Reproduction in whole or in part without the express written permission of ASSA ABLOY Accessories and Door Controls Group, Inc. is prohibited.

Five Knuckle Heavy Weight Series (Reversible)

Recommended for use on high frequency and/or heavy weight wood or metal doors in schools, hospitals or other public buildings where heavy traffic is experienced.

T4A3382
T4A3782

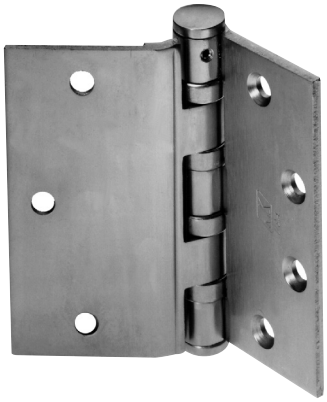

- Heavy weight half surface hinges are packed with all machine screws and thru bolts and grommet nuts
- The jamb leaf is fastened into the mortise with machine screws. The door leaf is applied full surface with thru bolts and grommet nuts
- The pin is held in place by an NRP set screw, which allows the hinge to be reversible
- Specify if the door thickness is greater than 1¾" to ensure that proper bolt is packed
- For available finishes see page 28

No.	ANSI Cross Reference	Base Material	Weight
T4A3382	A5411	Stainless	HVY
T4A3782	A8411	Steel	HVY

Application

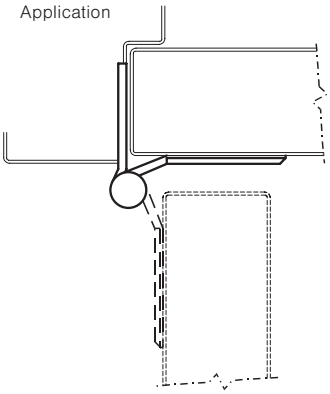

Specifications

Inches	mm	Gauge	No. of Holes	Machine Screws Door	Machine Screws Jamb
4½"	114.3	.180	7	2 x ¼-20	½ x 12-24
5"	127.0	.190	8	2 x ¼-20	½ x 12-24
6"*	152.4	.203	10	2 x ¼-20	½ x ¼-20

*Advise door thickness 1¾" or 2 ¼".

Options:

Code	Description
BP-10	Back Plate*
TB	Ball Bearing
HT	Hospital Tip

* Refer to page HS-8 for BP-10.

Approved for NFPA 80 fire rated openings

McKinney is a brand associated with ASSA ABLOY Accessories and Door Controls Group, Inc. Copyright © 2012-2025, ASSA ABLOY Accessories and Door Controls Group, Inc. All rights reserved. Reproduction in whole or in part without the express written permission of ASSA ABLOY Accessories and Door Controls Group, Inc. is prohibited.

McKinney
ASSA ABLOY
Experience a safer and more open world

Five Knuckle Heavy Weight Swing Clear Series (Reversible)

The wide swing of these hinges allows maximum clearance for passage of beds, tables or other equipment through door openings.

- Recommended for use on high frequency and/or heavy wood or metal doors in schools, hospitals or other public buildings where heavy traffic is experienced
- Swing clear heavy weight half surface hinges are packed with all machine screws and thru bolts and grommet nuts
- The jamb leaf is fastened into the mortise with machine screws. The door leaf is applied full surface with thru bolts and grommet nuts
- The pin is held in place by an NRP set screw, which allows the hinge to be reversible
- Specify if the door thickness is greater than 1 3/4" to ensure that proper bolt is packed
- Available in 26D

T4A3796

Application

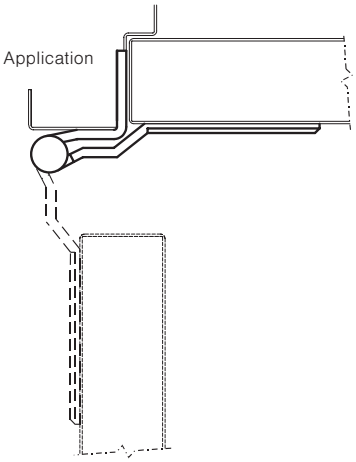

No.	ANSI Cross Reference	Base Material	Weight
T4A3796	A8421	Steel	HVY

Specifications

Inches	mm	Gauge	No. of Holes	Machine Screws Door	Machine Screws Jamb
5"	127.0	.190	9	2 x 1/4-20	1/2 x 12-24

Options:

Code	Description
HT	Hospital Tip
T4B	Ball Bearing

Approved for NFPA 80 fire rated openings

McKinney
ASSA ABLOY
Experience a safer and more open world

800-346-7707 | www.mckinneyhinge.com
Check the web site for the up-to-date catalog

McKinney is a brand associated with ASSA ABLOY Accessories and Door Controls Group, Inc. Copyright © 2012-2025, ASSA ABLOY Accessories and Door Controls Group, Inc. All rights reserved. Reproduction in whole or in part without the express written permission of ASSA ABLOY Accessories and Door Controls Group, Inc. is prohibited.

Hinge Back Plate

Recommended for use with Half Surface Hinges.

- Available to fit popular half surface hinges
- For finishes see page 29

No.	For Use With	Base Material
BP-10	TA2772, T4A3782	Steel
BP-11	T4A3796	Steel

Specifications

No.	Inches	mm	No. of Holes
BP-10	4 1/2"	114.3	3
BP-10	5"	127.0	4
BP-11	5"	127.0	5

BP-10

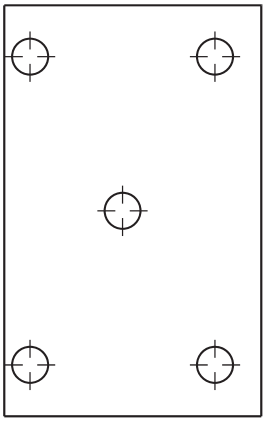

BP-11

McKinney is a brand associated with ASSA ABLOY Accessories and Door Controls Group, Inc. Copyright © 2012-2025, ASSA ABLOY Accessories and Door Controls Group, Inc. All rights reserved. Reproduction in whole or in part without the express written permission of ASSA ABLOY Accessories and Door Controls Group, Inc. is prohibited.

McKinney
ASSA ABLOY
Experience a safer and more open world

Five Knuckle Heavy Weight Series (Reversible)

Recommended for use on high frequency and/or heavy weight wood or metal doors in schools, hospitals or other public buildings where heavy traffic is experienced.

- The hinges may be used on channel iron frames
- The narrow leaf is applied to the surface of the jamb with machine screws. The door leaf is applied to the surface of the door with thru bolts and grommet nuts
- Heavy weight full surface hinges are packed with all machine screws and thru bolts and grommet nuts
- The pin is held in place by an NRP set screw, which allows the hinge to be reversible
- T4A3381 available in 32D, T4A3781 available in P and 26D
- Specify if the door thickness is greater than 1 3/4" to ensure that proper bolt is packed

T4A3381
T4A3781

No.	ANSI Cross Reference	Base Material	Weight
T4A3381	A5311	Stainless	HVY
T4A3781	A8311	Steel	HVY

Application

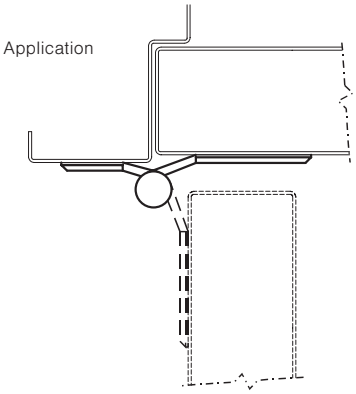

Specifications

Inches	mm	Gauge	No. of Holes	Machine Screws Door	Machine Screws Jamb
4 1/2"	114.3	.180	6	2 x 1/4-20	1/2 x 12-24
5"	127.0	.180	8	2 x 1/4-20	1/2 x 12-24
6"	152.4	.203	9	2 x 1/4-20	1/2 x 1/4-20

Options:

Code	Description
T4B	Ball Bearing
HT	Hospital Tip

Approved for NFPA 80 fire rated openings

McKinney is a brand associated with ASSA ABLOY Accessories and Door Controls Group, Inc. Copyright © 2012-2025, ASSA ABLOY Accessories and Door Controls Group, Inc. All rights reserved. Reproduction in whole or in part without the express written permission of ASSA ABLOY Accessories and Door Controls Group, Inc. is prohibited.

Five Knuckle Standard Weight Series (Reversible)

Recommended for use on average frequency and/or medium weight wood or metal doors in schools, hospitals or other public buildings where medium traffic is experienced.

- The hinges may be used on channel iron jambs
- The narrow leaf is applied to the surface of the jamb with machine screws. The door leaf is applied to the surface of the door with thru bolts and grommet nuts
- Standard weight full surface hinges are packed with all machine screws and thru bolts and grommet nuts
- The pin is held in place by an NRP set screw, which allows the hinge to be reversible
- Specify if the door thickness is greater than 1$^{3}/_{4}$" to ensure that proper bolt is packed
- For TA2771 available finishes see page 28, TA2371 available in 32D

TA2371
TA2771

No.	ANSI Cross Reference	Base Material	Weight
TA2371	A5312	Stainless	STD
TA2771	A8312	Steel	STD

Application

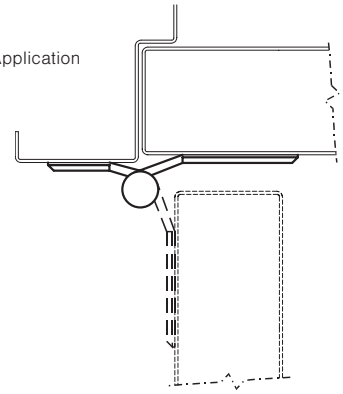

Specifications

Inches	mm	Gauge	No. of Holes	Machine Screws Door	Machine Screws Jamb
4$^{1}/_{2}$"	114.3	.134	6	2 x $^{1}/_{4}$-20	$^{1}/_{2}$ x 12-24
5"	127.0	.146	8	2 x $^{1}/_{4}$-20	$^{1}/_{2}$ x 12-24

Options:

Code	Description
T4B	Ball Bearing
HT	Hospital Tip

Approved for NFPA 80 fire rated openings

McKinney is a brand associated with ASSA ABLOY Accessories and Door Controls Group, Inc. Copyright © 2012-2025, ASSA ABLOY Accessories and Door Controls Group, Inc. All rights reserved. Reproduction in whole or in part without the express written permission of ASSA ABLOY Accessories and Door Controls Group, Inc. is prohibited.

McKinney
ASSA ABLOY
Experience a safer and more open world

Standard Weight Spring Hinge

Recommended for standard weight, medium frequency doors in place of door closers in apartments, hotels, motels, office buildings, etc.

- Full mortise single acting spring hinge
- Spring hinges are an alternative to door closing devices. For maximum performance it is recommended to use all spring hinges on the door.
- This non-handed spring hinge series is adjustable and tension can be added or reduced by means of a hex key that is provided
- **Caution:** Use of gasketing for smoke or sound protection, wind conditions or unbalanced air pressure, twisted or misaligned frames or doors, door bottoms, improper latch adjustment may prevent doors from latching. Additional spring hinges may be required.
- For available finishes see page 28

1502
1552

c UL us LISTED

Application

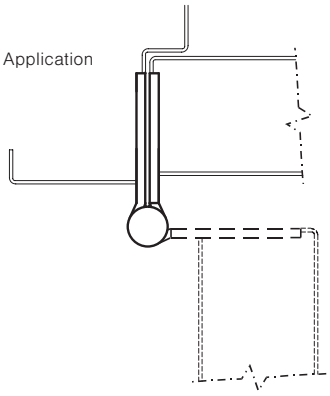

No.	ANSI Cross Reference	Base Material	Weight
1502	K81081	Steel	STD
1502	K81081F	Steel	STD
1552	K51071	Stainless Steel	STD
1552	K51071F	Stainless Steel	STD

Specifications

Inches	mm	Gauge	No. of Holes	Fasteners Machine	Fasteners Wood
4" x 4"*	101.6 x 101.6	.130	8	1/2 x 12-24	1 1/4 x 12
4 1/2" x 4"	114.3 x 101.6	.134	8	1/2 x 12-24	1 1/4 x 12
4 1/2" x 4 1/2"	114.3 x 114.3	.134	8	1/2 x 12-24	1 1/4 x 12

*Not available in 1552.

Approved for NFPA 80 fire rated openings

McKinney
ASSA ABLOY
Experience a safer and more open world

800-346-7707 | www.mckinneyhinge.com
Check the web site for the up-to-date catalog

McKinney is a brand associated with ASSA ABLOY Accessories and Door Controls Group, Inc. Copyright © 2012-2025, ASSA ABLOY Accessories and Door Controls Group, Inc. All rights reserved. Reproduction in whole or in part without the express written permission of ASSA ABLOY Accessories and Door Controls Group, Inc. is prohibited.

MacPro® Adjustable Spring Hinge

MacPro offers contract grade hinges to get the job done right. They are a key player in very competitive jobs, especially in the retrofit arena.

- Recommended for standard weight hinge applications requiring self-closing control, such as apartments, hotels, motels, dormitories, office buildings, etc
- Spring hinges are an alternative to door closing devices. Generally two hinges on the door must be spring hinges to provide adequate closing force NFPA requires a minimum of two (2) spring hinges on labeled doors
- MPS679 - Set of two MPS60 spring hinges and one MPB79 full mortise butt hinge
- MacPro templated hinges are made to conform to ANSI/BHMA 156.1, 156.7, 156.17
- MPS60 Finishes available: P - Prime Coat, 15, 26D, 10BE and BSP
- MPS679 available in 26D

Approved for NFPA 80 fire rated openings

MPS60
MPS679

c UL US LISTED

Application

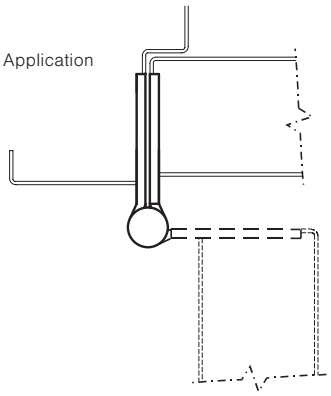

Full Surface Double Acting Door Spring

Simplified method of closing doors.

- This economical series is designed to be surface applied to the door and frame
- Coil springs made of high grade steel wire
- Adjustable tension, no special tools required
- Wrought steel brackets prevent breakage
- All 450 Series are finished in BSP and are packed with 1x12 wood screws

451
452
453

No.	ANSI Cross Reference	Base Material	Weight
451	K87441	Steel	HVY
452	K87441	Steel	HVY
453	K87441	Steel	HVY

Specifications

Number	Overall Length	Spring Length	No. of Holes	Fasteners Wood
451	9"	5"	6	1 x 12
452	11"	7"	6	1 x 12
453	13"	9"	6	1 x 12

800-346-7707 | www.mckinneyhinge.com
Check the web site for the up-to-date catalog

McKinney is a brand associated with ASSA ABLOY Accessories and Door Controls Group, Inc. Copyright © 2012-2025, ASSA ABLOY Accessories and Door Controls Group, Inc. All rights reserved. Reproduction in whole or in part without the express written permission of ASSA ABLOY Accessories and Door Controls Group, Inc. is prohibited.

McKinney
ASSA ABLOY
Experience a safer and more open world

Single Acting 6" Hinge

Allows the door to automatically return to the closed position.

- Supports one-way door movement
- Barrel design matches older single-action spring pivot hinges
- Adjustable spring tension brings door back to the closed position
- For wood doors
- Non-template, non-hold open
- Commercial grade
- Not compatible with other hinge types; does not align with standard full mortise hinges
- Packed with all wood screws
- Offered in the finish Prime (P) & Black (B)

6100

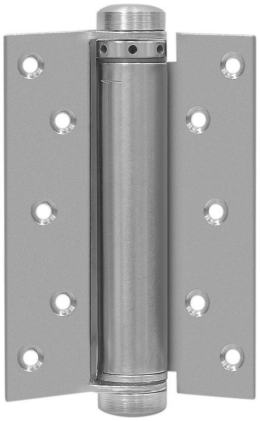

Specifications for 6100	
Base Material	Steel
Maximum Door Thickness	1-3/4"
Maximum Door Height	7"
Leaf Size	1-9/32" x 6"
If using two hinges	
Maximum door width	3'
Maximum door weight	125lbs
If using three hinges	
Maximum door width	4'
Maximum door weight	155lbs

McKinney
ASSA ABLOY
Experience a safer and more open world

800-346-7707 | www.mckinneyhinge.com
Check the web site for the up-to-date catalog

McKinney is a brand associated with ASSA ABLOY Accessories and Door Controls Group, Inc. Copyright © 2012-2025, ASSA ABLOY Accessories and Door Controls Group, Inc. All rights reserved. Reproduction in whole or in part without the express written permission of ASSA ABLOY Accessories and Door Controls Group, Inc. is prohibited.

Double Acting Spring Hinge

Recommended for wood doors not weighted with plate glass or heavy hardware.

- Door flange mortised or surface applied to edge of door
- Jamb flange surfaced applied to jamb
- Do not use on doors with hinge edge beveled
- Non-handed, non-template
- Packed with all wood screws
- Polished and plated 26D

1001

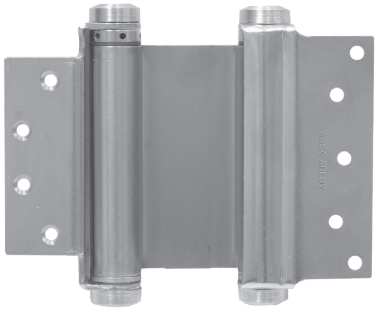

No.	ANSI Cross Reference	Base Material
1001	K81041	Steel

Application

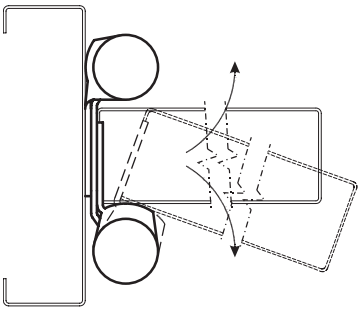

Maximum Door Sizes and Weights

	2 Hinges Per Door		3 Hinges Per Door		
Catalog Number	Door Weight Lbs.	Door Width	Door Weight Lbs.	Door Width	Door Height
1001 3"	35	2' 0"	40	2' 8"	5' 0"
1001 4"	60	2' 4"	75	3' 0"	6' 8"
1001 5"	65	2' 8"	93	3' 0"	6' 8"
1001 6"	75	2' 8"	107	3' 0"	7' 0"

* Minimum height for weights shown. Hinge capacity decreases as door height decreases. Refer to 6 x 41/2 1001 for 13/4" thick stock hollow metal doors.

Approximate Dimensions in Inches

A Length of Door Flange (size of hinge)	3"	4"	5"	6"
B Minimum Thickness of Door	$^{3}/_{4}$"	$^{7}/_{8}$"	$1^{1}/_{8}$"	$1^{1}/_{4}$"
C Maximum Thickness of Door with Chamfering	1"	$1^{1}/_{4}$"	$1^{1}/_{2}$"	$1^{3}/_{4}$"
D Maximum Thickness of Door without Chamfering for Metal Doors	$^{7}/_{8}$"	$1^{1}/_{8}$"	$1^{3}/_{8}$"	$1^{3}/_{4}$"
Door Specifications Minimum Maximum	$^{3}/_{4}$" x 2'2" to 1" x 2'0"	$^{7}/_{8}$" x 2'2" to $1^{1}/_{4}$" x 2'0"	$1^{1}/_{8}$" x 2'4" to $1^{1}/_{2}$" x 2'2"	$1^{1}/_{4}$" x 2'6" to $1^{3}/_{4}$" x 2'4"

It is recommended that three hinges be used on door sizes as indicated above.
The center hinge should be installed as close as possible to the top hinge for maximum support.

McKinney is a brand associated with ASSA ABLOY Accessories and Door Controls Group, Inc. Copyright © 2012-2025, ASSA ABLOY Accessories and Door Controls Group, Inc. All rights reserved. Reproduction in whole or in part without the express written permission of ASSA ABLOY Accessories and Door Controls Group, Inc. is prohibited.

McKinney
ASSA ABLOY
Experience a safer and more open world

Double Acting Spring Hinge

Recommended for use on stock hollow metal or wood doors that are 1¾" thick.

- Door flange designed to fit standard 4½" x 4½" template mortise
- Jamb flange surfaced applied to jamb
- Do not use on doors with hinge edge beveled
- Non-handed, non-template
- Packed with all machine screws and half wood screws
- US26D only

1001 6x4½

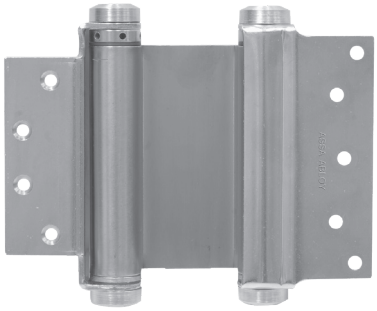

No.	ANSI Cross Reference	Base Material
1001	K81151	Steel

Application

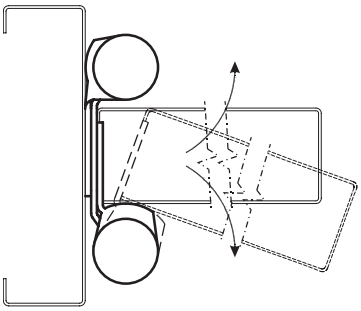

Specification Schedule for Door 7' High or More

	Max Door Weight Lbs.*		Lockside Clearance*	
Door Width	2 Each	3 Each	Flat Edge	Round Edge
2'0"	96	145	1/4"	1/16"
2'2"	89	135	3/16"	1/16"
2'6"	77	125	3/16"	1/16"
2'8"	72	115	1/8"	1/16"
3'0"	64	105	1/8"	1/16"

* Minimum height for weights shown. Hinge capacity decreases as door height decreases.

It is recommended that three hinges be used on door sizes as indicated above. These listed weights include a margin of safety. Minimum clearance required on edge of door and frame on lock side. Hinge side clearance, allow 1/4" per door because of jamb flange and hinge body not being mortised. The center hinge should be installed as close as possible to the top hinge for maximum support. Hinge capacity decreases as door height decreases.

McKinney is a brand associated with ASSA ABLOY Accessories and Door Controls Group, Inc. Copyright © 2012-2025, ASSA ABLOY Accessories and Door Controls Group, Inc. All rights reserved. Reproduction in whole or in part without the express written permission of ASSA ABLOY Accessories and Door Controls Group, Inc. is prohibited.

Gravity Double Acting Pivot Hinge

Enables the door to open in both directions and automatically return to the center position.

- Recommended for use on double acting saloon doors
- Mounted to top and bottom of each door
- Door weight closes the door – no spring
- Ideal for heavy-duty applications and high-traffic areas
- Hold-open feature that keeps door at a 90-degree angle (H8007)
- Constructed from heavy-duty commercial grade steel
- US26D finish only
- Easy to install

8007
H8007

Specifications for 8007/H8007

Base Material	Steel
Door Thickness	7/8" to 1-5/8"
Door Weight Lbs.	50
Door Width	30"
Door Height*	5'0"

* Maximum height for weights shown. Hinge capacity decreases as gate height decreases.

Non-Adjustable Double Acting Spring Pivot Hinge

Allows swinging door to self-return to center.

- Two parts, door top pivot and door bottom jamb bracket
- Bottom jamb bracket fits doors 1-1/4" wide or larger
- Anti-friction bearing
- Non-handed
- Provides reliability and strength to the door
- Ideal for swinging doors, half doors, restaurant kitchen doors, and courtroom doors

4007

Specifications for 4007

Base Material	Zinc
Door Thickness	1" to 2-1/2"
Door Width	36"
Door Weight Lbs.	75

*Door width and weight are maximums.

McKinney is a brand associated with ASSA ABLOY Accessories and Door Controls Group, Inc. Copyright © 2012-2025, ASSA ABLOY Accessories and Door Controls Group, Inc. All rights reserved. Reproduction in whole or in part without the express written permission of ASSA ABLOY Accessories and Door Controls Group, Inc. is prohibited.

McKinney
ASSA ABLOY
Experience a safer and more open world

Jamb Mount Pivot Set

Recommended for installations on average frequency double acting doors in schools, hospitals, institutions and other public buildings.

- Used in conjunction with CSS-9 Combinations Strike and Stops and DS-6 Emergency Door Stops
- Thrust steel ball bearing in bottom pivot, oil impregnated bronze bearing in top pivot
- Center Hung
- Mortised into side jamb
- Full mortise top pivot
- Non-handed
- $1^{5}/_{32}$ radius heel edge of door
- Maximum Door Weight (interior or exterior) up to 125 lbs 3'6" x 8'0"
- All EP-5J Pivot sets are packed with 14 x $1^{1}/_{2}$" wood screws and $^{1}/_{4}$-20 x $^{5}/_{8}$" machine screws
- Ferrous base pivot set polished and plated 26D

EP-5J

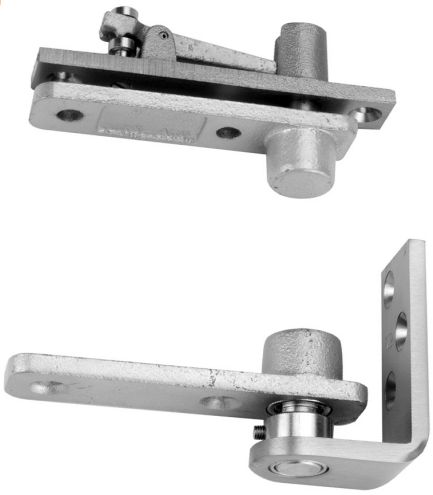

Specifications

No.	ANSI Cross Reference	Base Material
EP-5J	C07042	Steel

Door Weight Chart
(lbs per square foot)

	Door Thickness	
	$1^{3}/_{4}$"	2"
Aluminum	$3^{1}/_{2}$ lbs	5 lbs
Wood-Particle Core	5 lbs	$5^{3}/_{4}$ lbs
Wood-Stave Block Core	4 lbs	$4^{1}/_{2}$ lbs
14 Gauge Hollow Metal	$8^{3}/_{4}$ lbs	10 lbs
16 Gauge Hollow Metal	$7^{1}/_{2}$ lbs	$8^{1}/_{2}$ lbs
18 Gauge Hollow Metal	$6^{1}/_{2}$ lbs	$7^{1}/_{2}$ lbs

800-346-7707 | www.mckinneyhinge.com
Check the web site for the up-to-date catalog

McKinney is a brand associated with ASSA ABLOY Accessories and Door Controls Group, Inc. Copyright © 2012-2025, ASSA ABLOY Accessories and Door Controls Group, Inc. All rights reserved. Reproduction in whole or in part without the express written permission of ASSA ABLOY Accessories and Door Controls Group, Inc. is prohibited.

Combination Strike and Stop

Recommended for installations on hospital or nursing home bathroom doors along with our EP-5J. This unit allows center hung or 1/8" inset doors to be opened in both directions without damaging the frame.

- Manufactured for use with cylindrical or bored locks
- Cannot be used with deadbolts
- Can be manufactured for the following mortise locks:
  - Sargent 7900 and 8200 (no deadbolt function)
  - Corbin Russwin ML2000 (no deadbolt function)
  - ASSA ABLOY ACCENTRA™ 8800 (no deadbolt function)
  - When ordering, specify lock model and function
- Available in offset or center hung latch bolt location for frame sizes 5 3/4", 5 7/8" and 6 3/4"
- Custom units available for frame sizes 3 1/2" to 10" consult factory for availability
- For use on 1 3/4" thick doors
- All Combination Strike and Stops are packed with 1/2 x 8-32 machine screws
- Available in brass material polished and plated 26D
- Please provide order form for all CSS-9 orders

CSS-9
Offset Hung

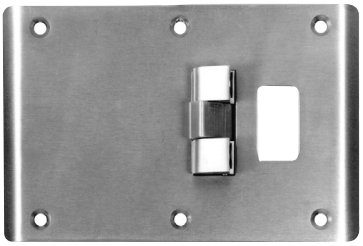

CSS-9
Center Hung

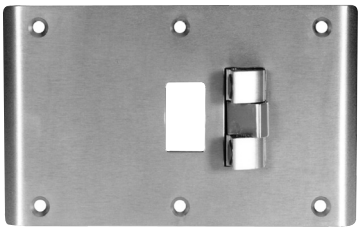

Application

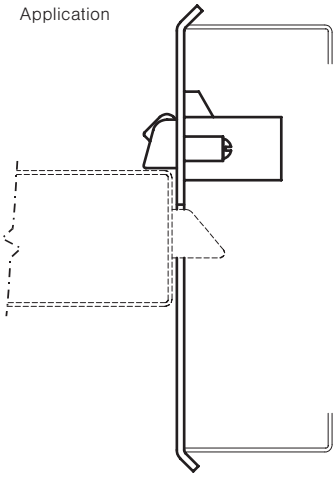

No.	ANSI Cross Reference	Base Material
CSS-9	A1882	Brass

Specifications

Inches	mm	Gauge	No. of Holes	Fasteners Machine
5 3/4"	146.1	.095	6	1/2 x 8-32
5 7/8"	149.2	.095	6	1/2 x 8-32
6 3/4"	171.5	.095	6	1/2 x 8-32

McKinney is a brand associated with ASSA ABLOY Accessories and Door Controls Group, Inc. Copyright © 2012-2025, ASSA ABLOY Accessories and Door Controls Group, Inc. All rights reserved. Reproduction in whole or in part without the express written permission of ASSA ABLOY Accessories and Door Controls Group, Inc. is prohibited.

McKinney
ASSA ABLOY
Experience a safer and more open world

Emergency Door Stop

DS-6

Recommended for installation with our EP-5J pivot in schools, hospitals, institutions and other public buildings. This unit allows center hung or 1/8" inset doors to be opened in both directions without damaging the frame.

- Used to convert double acting doors hung on center pivots to single acting doors
- Emergency release allows door to swing open in the opposite direction
- Mortise only on frame
- Latch releases with a touch of the finger
- Second touch of lever returns latch to original position
- Available in brass material polished and plated 26D

No.	ANSI Cross Reference	Base Material
DS-6	A1882	Brass

Application

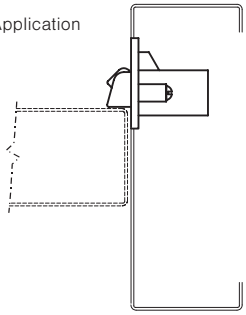

Specifications

Inches	mm	Gauge	No. of Holes	Fasteners Machine
Surface Plate 4 1/2" x 1 5/8"	114.3 x 41.3	.134	4	1/2 x 12-24
Bolt height 1 3/4"	44.5			

Double Lipped Strike

DLS-8

Recommended for installations on hospital or nursing home bathroom doors along with our EP-5J and DS-6 Emergency Stop. This unit allows center hung or 1/8" inset doors to be opened in both directions without damaging the frame.

- Manufactured for use with cylindrical or bored locks
- Cannot be used with deadbolts
- Can be manufactured for the following mortise locks:
  - Sargent 7900 and 8200 (no deadbolt function)
  - Corbin Russwin ML2000 (no deadbolt function)
  - ASSA ABLOY ACCENTRA™ 8800 (no deadbolt function)
  - When ordering, specify lock model and function
- Available in offset or center hung
- Latch bolt location for frame sizes 5 3/4 and 6 3/4"
- Custom units available for frame sizes 3 1/2" to 10". Consult factory for availability
- For use on 1 3/4" thick doors
- All Combination Strike and Stops are packed with 1/2 x 8-32 machine screws
- Available in brass material polished and plated 26D

Application

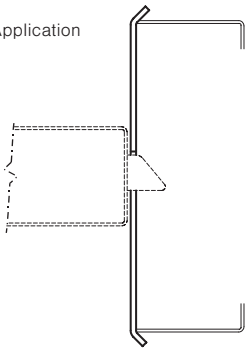

Specifications

Inches	mm	Gauge	No. of Holes	Fasteners Machine
5 3/4"	146.1	.095	6	1/2 x 8-32
6 3/4"	171.5	.095	6	1/2 x 8-32

McKinney is a brand associated with ASSA ABLOY Accessories and Door Controls Group, Inc. Copyright © 2012-2025, ASSA ABLOY Accessories and Door Controls Group, Inc. All rights reserved. Reproduction in whole or in part without the express written permission of ASSA ABLOY Accessories and Door Controls Group, Inc. is prohibited.

ElectroLynx® Hinge (QC option)

Each hinge features concealed plug connectors that eliminate the need for separate or exposed wiring. Standard connectors make installation quick and simple. Brass eyelets add protection and durability.

- QC option is available on standard and heavy weight full mortise bearing hinges as well as swing clear and wide throw hinges
- Electric hinges allow a constant flow of current from the power source through the hinge to electrified door hardware
- No external wires can be seen, eliminating tampering and improving the aesthetics of the door opening
- Materials: Brass, stainless steel, and steel
- For 4 amp continuous @ 24 volts AC or DC per circuit, 28 gauge multi-strand wires are used
- An 8 position connector is used for QC4 and QC8 wire hinges. An 8 position and a 4 position connector is used for QC12 wire hinges
- Hand of hinge must be specified on two knuckle hinges
- Can be used in conjunction with MM option on most full mortise hinges. QC12 x MM not recommended for wood or solid core doors
- Full Mortise QC hinges are available in most BHMA and McKinney powder coat finishes
- Wires are coordinated to work with other ASSA ABLOY Group brands electro-mechanical hardware

**Electric hinges should be installed in the center position on the door. Installation instructions are packed with each hinge.*

**Hinges are factory tested and specially packaged to minimize against damage during shipment.*

QC-12

c UL us LISTED

Application

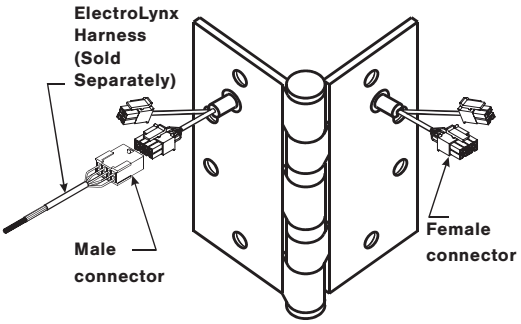

Back of 12 wire hinge shown

3-Knuckle	5-Knuckle
TA314	TA2314
TA714	TA2714
TA386	T4A3386
TA786	T4A3786
	TA2895
	T4A3395
	T4A3795

Most hinges including this Swing Clear Hinge can be electrically modified. Call 1-800-346-7707 for more information.

Options:

Code	Description
QC4	2 circuits
QC8	4 circuits
QC12	6 circuits

Steel & Stainless - Approved for NFPA 80 fire rated openings

800-346-7707 | www.mckinneyhinge.com
Check the web site for the up-to-date catalog

McKinney is a brand associated with ASSA ABLOY Accessories and Door Controls Group, Inc. Copyright © 2012-2025, ASSA ABLOY Accessories and Door Controls Group, Inc. All rights reserved. Reproduction in whole or in part without the express written permission of ASSA ABLOY Accessories and Door Controls Group, Inc. is prohibited.

McKinney ASSA ABLOY

Experience a safer and more open world

ElectroLynx® Retrofit Cables

If you are not ordering ASSA ABLOY Door Group doors with the ElectroLynx® cable pre-installed in the door, you must order an ElectroLynx® retrofit cable to go between ANY hardware and the hinge.

- Includes 3" cables to go from the hinge to an exit device
- Includes a cable that is up to 15' that goes up and around a full lite metal door

QC-C1500P Shown

Standard ElectroLynx® Retrofit Cable Sizes

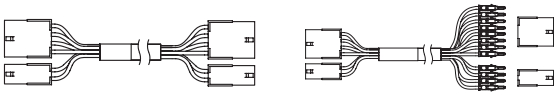

Actual Cable Length	12 Conductor and Molex both ends	12 Conductor and Molex one end, pinned one end	Typical Application
3"	QC-C003	QC-C003P	Between hinge and the end of an exit device.
6"	QC-C006	QC-C006P	
12"	QC-C012	QC-C012P	
26"	QC-C200	QC-C200P	Between hinge and through the door to the lockset or exit device trim.
32"	QC-C206	QC-C206P	
38"	QC-C300	QC-C300P	
44"	QC-C306	QC-C306P	
50"	QC-C400	QC-C400P	
15' 2"	QC-C1500	QC-C1500P	From the hinge location, up the jamb to above the ceiling, or up and around full lite or half lite metal door.
25'	-	QC-C2500P	
30'	-	QC-C3000P	

Custom lengths available.

800-346-7707 | www.mckinneyhinge.com
Check the web site for the up-to-date catalog

McKinney is a brand associated with ASSA ABLOY Accessories and Door Controls Group, Inc. Copyright © 2012-2025, ASSA ABLOY Accessories and Door Controls Group, Inc. All rights reserved. Reproduction in whole or in part without the express written permission of ASSA ABLOY Accessories and Door Controls Group, Inc. is prohibited.

MacPro® Electric Hinges

MacPro® Electric Hinges connect the power source to electrified door hardware such as locking hardware and exit devices. They are ideal for new construction as well as retrofit and aftermarket applications. The MacPro Electric Hinges feature center exit wires allowing them to replace existing electric hinges with center exit wires.

c UL us LISTED

- MacPro Electric Hinges are easy to install with ElectroLynx® Quick Connect (QC) or Concealed Circuit (CC) connection options
- Once installed, the wires are concealed to increase security and prevent tampering
- Available in standard and heavy weight
- Brass eyelets on the portal holes prevent chafing, giving the hinge an extended service life
- UL Listed
- Concealed Circuit (CC) is available as CC4 or CC8
- ElectroLynx® Quick Connect (QC) is available with QC4, QC8 or QC12

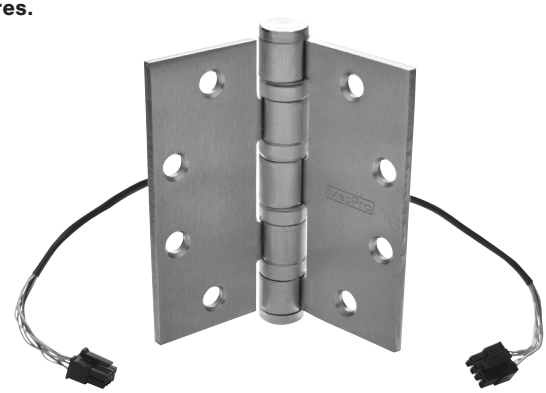

Approved for NFPA 80 fire rated openings

No.	Size	Hinge Type	Base Material	Gauge	Weight	Finish	Connector Options
MPB79	4 1/2" x 4"	Bearing	Steel	.134	STD	26D	CC4, CC8
MPB79	4 1/2" x 4"	Bearing	Steel	.134	STD	26D	QC4, QC8, QC12
MPB79	4 1/2" x 4 1/2"	Bearing	Steel	.134	STD	26D	CC4, CC8
MPB79	4 1/2" x 4 1/2"	Bearing	Steel	.134	STD	26D, BSP	QC4, QC8, QC12
MPB79	4 1/2" x 4 1/2"	Bearing	Steel	.134	STD	BSP	CC8, QC8, QC12
MPB68	4 1/2" x 4 1/2"	Bearing	Steel	.180	HVY	26D	CC4, CC8
MPB68	4 1/2" x 4 1/2"	Bearing	Steel	.180	HVY	26D	QC4, QC8, QC12
MPB91	4 1/2" x 4	Bearing	Stainless	.134	STD	32D	CC8, QC12
MPB91	4 1/2" x 4 1/2	Bearing	Stainless	.134	STD	32D	CC8, QC12
MPB99	4 1/2" x 4	Bearing	Stainless	.180	HVY	32D	CC8, QC12
MPB99	4 1/2" x 4 1/2	Bearing	Stainless	.180	HVY	32D	CC8, QC12
MPB99	5" x 4½	Bearing	Stainless	.180	HVY	32D	CC8, QC12

800-346-7707 | www.mckinneyhinge.com
Check the web site for the up-to-date catalog

McKinney is a brand associated with ASSA ABLOY Accessories and Door Controls Group, Inc. Copyright © 2012-2025, ASSA ABLOY Accessories and Door Controls Group, Inc. All rights reserved. Reproduction in whole or in part without the express written permission of ASSA ABLOY Accessories and Door Controls Group, Inc. is prohibited.

McKinney ASSA ABLOY
Experience a safer and more open world

Concealed Circuit Electric Hinge (CC option)

McKinney Concealed Circuit (CC) electric hinges allow a constant flow of current from the power source through the hinge to electrified door hardware. No external wires can be seen, eliminating disruption of power due to tampering or disconnection, and improving the aesthetics of the opening.

c UL us LISTED

- Allows operation of devices requiring power such as electric locks, electric strikes, and electric latch retraction exit devices
- Wires are contained within the hinge – invisible and tamperproof
- Available with most two, three, and five knuckle bearing hinges
- Available with 4, 8 or 12 wires
- Materials: Standard and heavy weight, brass, steel, and stainless steel
- Four amp continuous @ 24 volts AC or DC per circuit 16.0 Amps intermittent duty (pulse) for 300 milliseconds
- CC option has 28 gauge wire
- CC-18 option has 2 18 gauge wires and the remainder 28 gauge wire. Available 2,4,6,8 and 10 wire
- Can be used in conjunction with MM option on most full mortise hinges. CC12 x MM not recommended for wood or solid core doors
- Optional Mortar guard MG-16 available
- Hinges are supplied with 8" (305) leads as standard. Extra lengths are available at additional cost

Note: Two knuckle style is handed.

CC2-18

Application

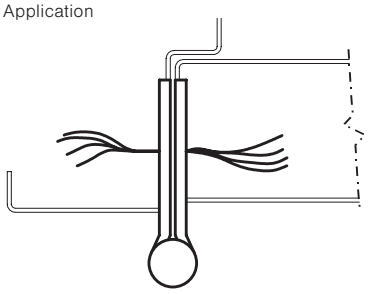

CC-18 Option

Suffix
CC4-18
CC8-18
CC2-18
CC6-18
CC10-18

CC Option

Suffix	Wires	Capacity
CC4	4	2 circuits
CC8	8	4 circuits
CC12	12	6 circuits

Approved for NFPA 80 fire rated openings

800-346-7707 | www.mckinneyhinge.com
Check the web site for the up-to-date catalog

McKinney is a brand associated with ASSA ABLOY Accessories and Door Controls Group, Inc. Copyright © 2012-2025, ASSA ABLOY Accessories and Door Controls Group, Inc. All rights reserved. Reproduction in whole or in part without the express written permission of ASSA ABLOY Accessories and Door Controls Group, Inc. is prohibited.

ElectroLynx® Power over Ethernet (PoE) Hinge

The McKinney ElectroLynx® PoE Quick Connect hinge provides for the passing of Ethernet data through the door opening. Installation is a snap with the friendly "plug and play" connectors which allow power to be linked from the incoming source through the door to the electrified hardware. PoE data is bidirectional.

c UL us LISTED

- Brass eyelets add protection and durability to the PoE hinge which features common wire colors coordinated to work with intelligent Power over Ethernet electromechanical hardware from SARGENT and Corbin Russwin
- The PoE hinge should be installed in the second from bottom hinge position on the door. Once installed, it will give no outward indication of its function and will transfer power and data efficiently and reliably, as long as the wire capacity is not exceeded
- All PoE hinges are factory tested and specially packaged to minimize damage during shipment. Installation instructions are packed with each hinge. Along with the PoE hinge, mating PoE door and frame side harnesses are required to complete the opening. The required PoE harnesses must be ordered separately
- Specify suffix PoE

Available on:

4½" and 5" TA2314 & TA2714 Standard Weight 5 Knuckle
4½" and 5" T4A3386 & T4A3786 Heavy Weight 5 Knuckle

PoE Option

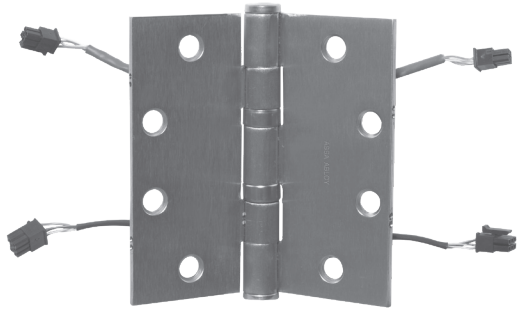

U.S. Patent No. 7,824,200

Application

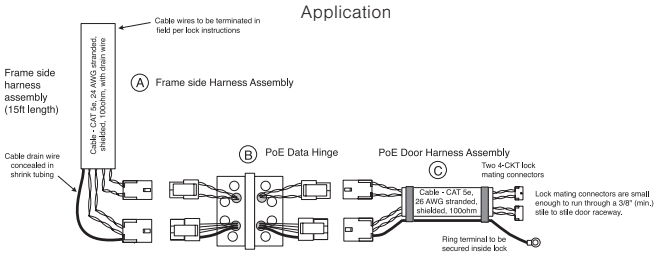

Steel & Stainless - Approved for NFPA 80 fire rated openings

Harness Length	McKinney Catalog #	Door Side Application
30"	PoE-C206P	20" to 25" door width (doors with 3 butt hinges with PoE hinge in center to stile to stile raceway to lock prep).
36"	PoE-C300P	26" to 31" door width (doors with 3 butt hinges with PoE hinge in center to stile to stile raceway to lock prep).
42"	PoE-C306P	32" to 36" door width (doors with 3 butt hinges with PoE hinge in center to stile to stile raceway to lock prep).
48"	PoE-C400P	37" to 42" door width (doors with 3 butt hinges with PoE hinge in center to stile to stile raceway to lock prep).
54"	PoE-C406P	43" to 48" door width (doors with 3 butt hinges with PoE hinge in center to stile to stile raceway to lock prep).
60"	PoE-C500P	Door Harness Assembly
84"	PoE-C700P	Door Harness Assembly
156"	PoE-C1300P	Door Harness Assembly
		EPT Harness
360"	PoE-CEPT30	EPT Harness Assembly
		Frame Side Application
180"	PoE-C1500P	From the hinge location, up the jamb to wall/ceiling
Custom Lengths Available		

800-346-7707 | www.mckinneyhinge.com
Check the web site for the up-to-date catalog

McKinney ASSA ABLOY
Experience a safer and more open world

McKinney is a brand associated with ASSA ABLOY Accessories and Door Controls Group, Inc. Copyright © 2012-2025, ASSA ABLOY Accessories and Door Controls Group, Inc. All rights reserved. Reproduction in whole or in part without the express written permission of ASSA ABLOY Accessories and Door Controls Group, Inc. is prohibited.

ElectroLynx® Power over Ethernet (PoE) Harnesses with RJ-45 Connectors

PoE-C206PRJ

Connecting ASSA ABLOY Group brands Corbin Russwin and SARGENT next generation Power over Ethernet (PoE) enabled hardware is quick and easy with new ElectroLynx® harnesses from McKinney. Molex connectors connect the hinge to the harness, and a standard RJ-45 connector connects the harness to the electrified door hardware.

The following hardware uses the RJ-45 connectors:

- Corbin Russwin IN220
- Corbin Russwin Access 700 PIP1
- SARGENT IN220
- SARGENT Passport 1000 P1

Harnesses are available with the RJ-45 connector attached or loose in the package. The harnesses range in length from 30" up to 156" with custom lengths available (consult factory).

ElectroLynx PoE Harnesses with RJ-45 Connectors

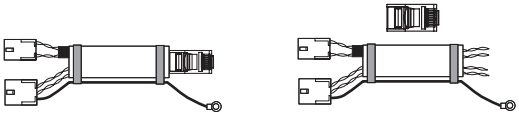

Actual Cable Length	Molex one end, RJ-45 attached one end	Molex one end, RJ-45 Loose	Door Side Application
30"	PoE-C206PRJ	PoE-C206RJ	20" to 25" door width (doors with 3 butt hinges with PoE hinge in center to stile to stile raceway to lock prep).
36"	PoE-C300PRJ	PoE-C300RJ	26" to 31" door width (doors with 3 butt hinges with PoE hinge in center to stile to stile raceway to lock prep).
42"	PoE-C306PRJ	PoE-C306RJ	32" to 36" door width (doors with 3 butt hinges with PoE hinge in center to stile to stile raceway to lock prep).
48"	PoE-C400PRJ	PoE-C400RJ	37" to 42" door width (doors with 3 butt hinges with PoE hinge in center to stile to stile raceway to lock prep).
54"	PoE-C406PRJ	PoE-C406RJ	43" to 48" door width (doors with 3 butt hinges with PoE hinge in center to stile to stile raceway to lock prep).
			Door Harness Assembly
60"	PoE-C500PRJ	PoE-C500RJ	Door Harness Assembly
84"	PoE-C700PRJ	PoE-C700RJ	Door Harness Assembly
156"	PoE-C1300PRJ	PoE-C1300RJ	Door Harness Assembly

EPT Harness Assembly

30 ft cable with loose RJ-45 connector

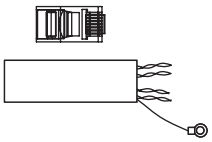

Actual Cable Length	RJ-45 Loose	EPT Harness Assembly
360"	PoE-CEPT30RJ	EPT Harness Assembly

McKinney is a brand associated with ASSA ABLOY Accessories and Door Controls Group, Inc. Copyright © 2012-2025, ASSA ABLOY Accessories and Door Controls Group, Inc. All rights reserved. Reproduction in whole or in part without the express written permission of ASSA ABLOY Accessories and Door Controls Group, Inc. is prohibited.

Magnetic Monitoring Hinge (MM Option)

The McKinney Magnetic Monitoring Hinge is the only system on the market that permits field replacement of magnet and switch. It is a simple, dependable system which defies detection, yet is readily accessible for inspection and easy adjustment.

- MM Electric Hinges should be installed in the center position on doors with three hinges or the second hinge position from the bottom on doors with four hinges
- Neither switch nor operating magnet are attached to the hinge. Non-attachment feature reduces the chance of damage during installation. Installation instructions packed with each hinge. All MM Electric Hinges are individually factory pre-tested
- The MM feature is available on most two, three and five knuckle full mortise standard and heavy weight hinges. Consult the individual catalog pages for this option feature
- For low voltage (48 volt maximum) .25 Amps AC or DC non-inductive load
- Magnetic reed concealed switch impervious to dirt and moisture
- Can be used in conjunction with QC option on most full mortise hinges up to QC12. QC12 x MM not recommended for wood or solid core doors
- Can be used in conjunction with CC option on most full mortise hinges up to CC12 Wire. CC12 x MM not recommended for wood or solid core doors

c UL us LISTED

MM Option

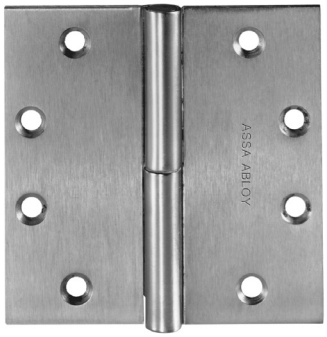

Front View

Back View

UL Listing	
6V	.25 Amps
12V	.25 Amps
24V	.125 Amps
48V	.062 Amps

Steel & Stainless - Approved for NFPA 80 fire rated openings

Application

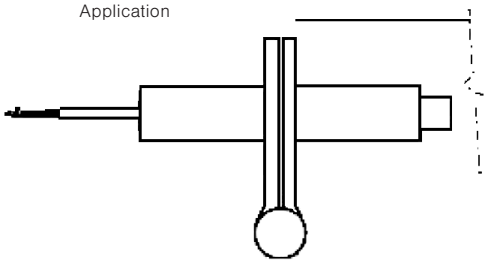

McKinney
ASSA ABLOY

Experience a safer and more open world

800-346-7707 | www.mckinneyhinge.com
Check the web site for the up-to-date catalog

McKinney is a brand associated with ASSA ABLOY Accessories and Door Controls Group, Inc. Copyright © 2012-2025, ASSA ABLOY Accessories and Door Controls Group, Inc. All rights reserved. Reproduction in whole or in part without the express written permission of ASSA ABLOY Accessories and Door Controls Group, Inc. is prohibited.

Concealed Electrical Hinges

For use on wood or hollow metal doors with wood or metal frames.

- Non-handed
- Opening angle: 180°
- 3-dimensional adjustability

Note: When installing with a door closer at least 3 hinges are required, and reduce maximum door weight in chart by 30%.

MK100ME

- Magnetic covers included
- Door thickness minimum: $1^{3}/_{8}$"
- Base material: Zinc alloy
- Satin Chrome and Matte Black finishes
- Available in CC12 and QC12 configurations

Hinge Capacity

Number of Hinges	Door Width 32"	36"	42"	48"
2	224 lbs	220 lbs	180 lbs	165 lbs
3	253 lbs	246 lbs	202 lbs	185 lbs
4	282 lbs	275 lbs	216 lbs	198 lbs

MK100ME

MK130+8ME

- Magnetic covers included
- Door thickness minimum: 1-3/4"
- Base material: Zinc alloy
- Satin Chrome and Matte Black finishes
- Clears cladding on door up to 8 mm (1/3")
- Available in CC12 and QC12 configurations
- Cataphoresis coating

Hinge Capacity

Number of Hinges	Door Width 27.5"	31.5"	36"	40"
2	368 lbs	322 lbs	287 lbs	258 lbs
3	414 lbs	362 lbs	322 lbs	291 lbs
4	461 lbs	403 lbs	359 lbs	322 lbs

MK130+8ME

MK150ME

- Magnetic covers included
- Door thickness minimum: 1-1/2"
- Base material: Zinc alloy
- Cataphoresis coating
- Satin Chrome and Matte Black finishes
- Available in CC12 and QC12 configurations
- ANSI/BHMA A156.1 Double Weight Testing Accomplished

Hinge Capacity

Number of Hinges	Door Width 32"	36"	38"	42"	48"
2	366 lbs	326 lbs	313 lbs	280 lbs	245 lbs
3	412 lbs	367 lbs	352 lbs	315 lbs	275 lbs
4	457 lbs	408 lbs	391 lbs	350 lbs	306 lbs

MK150ME

MK200ME

- Magnetic covers included
- Door thickness minimum: 1-3/4"
- Base material: Zinc alloy
- Cataphoresis coating
- Satin Chrome and Matte Black finishes
- Available in CC12 and QC12 configurations
- ANSI/BHMA A156.1 Triple Weight Testing Accomplished

Hinge Capacity

Number of Hinges	Door Width 32"	36"	38"	42"	48"
2	487 lbs	434 lbs	417 lbs	373 lbs	326 lbs
3	548 lbs	489 lbs	469 lbs	419 lbs	367 lbs
4	609 lbs	543 lbs	521 lbs	466 lbs	408 lbs

MK200ME

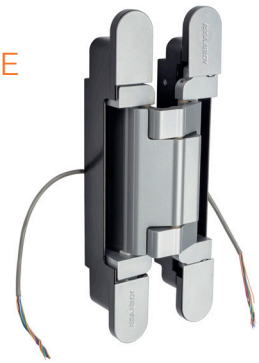

McKinney
ASSA ABLOY

Experience a safer and more open world

800-346-7707 | www.mckinneyhinge.com
Check the web site for the up-to-date catalog

McKinney is a brand associated with ASSA ABLOY Accessories and Door Controls Group, Inc. Copyright © 2012-2025, ASSA ABLOY Accessories and Door Controls Group, Inc. All rights reserved. Reproduction in whole or in part without the express written permission of ASSA ABLOY Accessories and Door Controls Group, Inc. is prohibited.

Electrified Hinge Service Kit

- Includes a quantity of every different type of connector and terminal required for repairing product connections/terminations or pinning wires on certain retrofit harnesses
- Contains 10 each 2, 4, 8 Molex receptacles and plugs as well as corresponding terminals, extraction tool and pinning assembly guider

Part #	Description
QC-R001	Service Kit

Receptacles and Terminals

Quantity	Part #	Description
1 bag (100 pc)	QC-RF2	Female receptacle (2ckt)
1 bag (100 pc)	QC-RF4	Female receptacle (4ckt)
1 bag (100 pc)	QC-RF8	Female receptacle (8ckt)
1 bag (100 pc)	QC-RM2	Male plug (2ckt)
1 bag (100 pc)	QC-RM4	Male plug (4ckt)
1 bag (100 pc)	QC-RM8	Male plug (8ckt)
1 bag (100 pc)	QC-FT2024	Female terminal (AWG 20-24)
1 bag (100 pc)	QC-FT2630	Female terminal (AWG 26-30)
1 bag (100 pc)	QC-MT2024	Male terminal (AWG 20-24)
1 bag (100 pc)	QC-MT2630	Male terminal (AWG 26-30)
1 bag (100 pc)	POE-MT2024	Male Terminal (AWG 20-24)
1 bag (100 pc)	POE-RM6	Male Plug
1 bag (100 pc)	POE-RF6	Female Plug
1 bag (100 pc)	POE-MT2630	Male Terminal
1 bag (100 pc)	POE-FT2630	Female Terminal
1 bag (10 pc)	QC-DCC	Pinning assembly guide

QC-R001

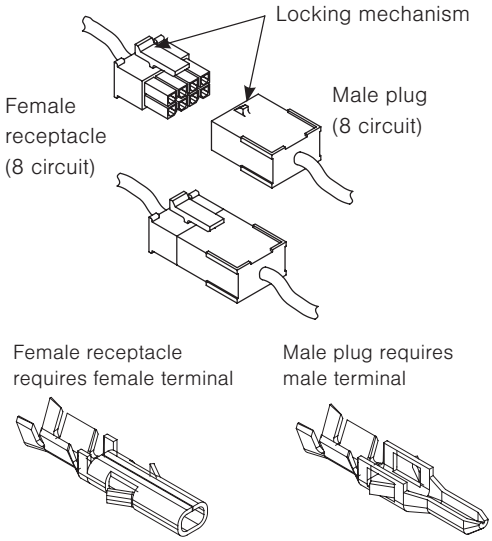

The plug and receptacle connectors are designed to mate and lock together as shown in the figure. Plug the connectors onto each other with the locking mechanism aligned as indicated.

Extraction Tool

Included in Electrified Hinge Service Kit

The extraction tool is a simple hand tool used to remove damaged terminals from an ElectroLynx® female receptacle or male plug.

Part #	Description
QC-R002	Extraction Tool

QC-R002

McKinney is a brand associated with ASSA ABLOY Accessories and Door Controls Group, Inc. Copyright © 2012-2025, ASSA ABLOY Accessories and Door Controls Group, Inc. All rights reserved. Reproduction in whole or in part without the express written permission of ASSA ABLOY Accessories and Door Controls Group, Inc. is prohibited.

Molex Hand Crimp Tool

Included in Electrified Hinge Service Kit

The crimp tool is required for adding Molex terminals (connector pins) to wires used with ElectroLynx® products. The tool is intended for low volume, or repair requirements only.

Part #	Description
QC-R003	Molex Hand Crimp Tool

QC-R003

Electrical Power Transfer (EPT)

Installs in the door and frame edges

- Accepts a thick cable and protects it within a flexible steel shield
- Device that will work on most doors hung using butt hinges, continuous hinges or pivots
- Will not function on a center pivot door

Part #	Description
McK-EPT	Electrical Power Transfer
McK-EPTL	Electrical Power Transfer Long
McK-EL-EPT	ElectroLynx® EPT-12 Wire
McK-EL-EPTL	ElectroLynx® EPTL-12 Wire

McK-EPTL, McK-EPT

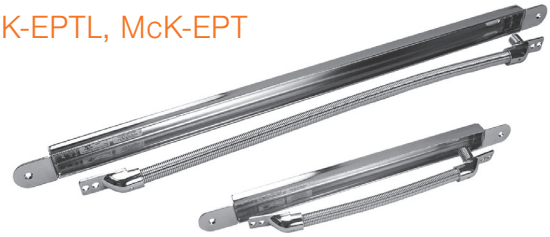

Door Chord (TSB)

Offered with grey or black caps

- Simplest and most economical solution for power transfer
- Consists of an 18" or 36" armored stainless steel cable and plastic end pieces in light gray and black
- Cable has an interior diameter of .25"
- Supports interior wire cables up to .2"

Part #	Description
McK-TSB-C	Door cord with gray/black caps 18" cord
McK-TSB-CXL	Door cord with gray/black caps 36" cord

McK-TSB-C

Junction Box for Electric Hinges

Recommended for use with our Concealed Circuit Hinges to protect wires. Unit to be installed in middle hinge location.

- Knock-out holes on both ends for wires to pass through
- Removable cover plate from end brackets
- Guard supplied assembled for use with electric hinges
- Fits hinge reinforcements for 4½" or 5" contract grade hinges
- 20 gauge galvanized sheet steel, furnished in 2C finish

Part #	Description
MG-16	Junction Box

MG-16

McKinney
ASSA ABLOY

Experience a safer and more open world

800-346-7707 | www.mckinneyhinge.com
Check the web site for the up-to-date catalog

McKinney is a brand associated with ASSA ABLOY Accessories and Door Controls Group, Inc. Copyright © 2012-2025, ASSA ABLOY Accessories and Door Controls Group, Inc. All rights reserved. Reproduction in whole or in part without the express written permission of ASSA ABLOY Accessories and Door Controls Group, Inc. is prohibited.

StormPro Tornado Resistant Hinges

Built to withstand the extreme wind speeds and flying debris associated with severe weather conditions.

- McKinney StormPro hinges are part of the integrated unit when used with StormPro tornado resistant assemblies from Ceco Door and CURRIES, along with other StormPro hardware by ASSA ABLOY Group brands
- ASSA ABLOY StormPro Assemblies Meet UL Certification for Fire, ICC 500-2014 and FEMA Guidelines
- Use for the common flush door/frame/wall application
- Fire rated thru 3 hours
- Packed with stainless steel machine screws

SP3386
SP3786

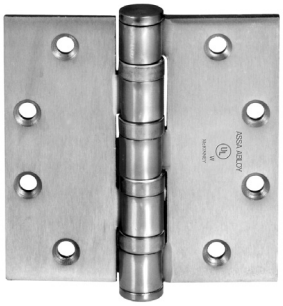

Application

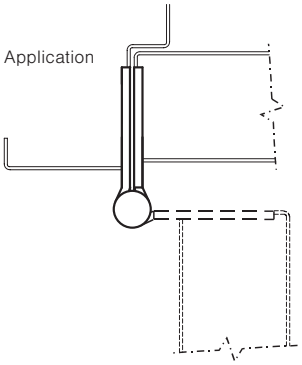

No.	ANSI Cross Reference	Base Material	Weight
SP3386	A5111	Stainless	HVY
SP3786	A8111	Steel	HVY

Specifications

Inches	mm	Gauge	No. of Holes	Fasteners Machine
4½" x 4½"	114.3 x 114.3	.180	8	½ x 12-24
4½" x 5"	114.3 x 127	.180	8	½ x 12-24
4½" x 6"	114.3 x 152.4	.180	8	½ x 12-24
4½" x 7"	114.3 x 177.8	.180	8	½ x 12-24
4½" x 8"	114.3 x 203.2	.180	8	½ x 12-24
5" x 4½"	127 x 114.3	.190	8	½ x 12-24
5" x 5"	127 x 127	.190	8	½ x 12-24
5" x 6"	127 x 152.4	.190	8	½ x 12-24
5" x 7"	127 x 177.8	.190	8	½ x 12-24
5" x 8"	127 x 203.2	.190	8	½ x 12-24

Options:

Code	Description
NRP	Non-Removable Pin
QC	ElectroLynx® Hinge 4, 8, 12 wire available on hinges up to 6" wide

Approved for NFPA 80 fire rated openings

McKinney is a brand associated with ASSA ABLOY Accessories and Door Controls Group, Inc. Copyright © 2012-2025, ASSA ABLOY Accessories and Door Controls Group, Inc. All rights reserved. Reproduction in whole or in part without the express written permission of ASSA ABLOY Accessories and Door Controls Group, Inc. is prohibited.

McKinney
ASSA ABLOY
Experience a safer and more open world

Pocket Pivot Hinges

Recommended for applications where use of the full width of the corridor is required, such as cross corridor and smoke and fire doors as well as patient room doors.

- Full Mortise Pocket Pivot Hinge
- Designed to give a flush appearance to the corridor when the door is open
- Recessed into a pocket in the corridor wall
- For single and cross-corridor doors
- Allows the door to lay against the wall with no projection into the opening
- No gap between the door and frame
- When combined with a floor closer, this application has minimum visible hardware and clearances
- Meets material and performance requirements of NFPA-80 and ANSI A-156-1
- Meets or exceeds ANSI A117.1 – 1986 Providing Accessibility and Usability for Physically Handicapped People
- Investment cast steel base material (Finish - 26D)
- Two thrust bearings for vertical loads
- Roller bearing for lateral support
- Listed for both hollow metal or steel covered composite fire doors rated up to 3 hours
- Listed for wood core type fire doors rated 20 minutes
- Non-handed

PH-4

Application

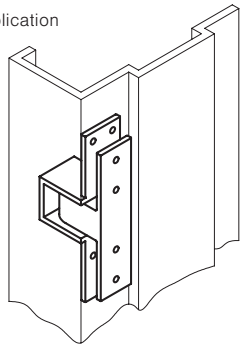

Specifications

No.	Base Material	Gauge	No. of Holes	Fasteners	
				Machine	Wood
PH-4	Cast Steel	.187	10	3/4 x 12-24	1 1/4 x 12

Specifications

Door Weight (Lbs.)	Door Width	# Hinges/Door
150	3'0" x 7'0"	2
250	3'0" x 7'0"	3
350	4'0" x 7'0"	4

Recommended for applications where Swing Clear Hinges are aesthetically unacceptable and use of the full width of the corridor is required, such as cross corridor and smoke and fire doors as well as patient room doors.

Approved for NFPA 80 fire rated openings

Meets or exceeds ANSI A117.1 - 1986 *Providing Accessibility and Usability for Physically Handicapped People*

McKinney is a brand associated with ASSA ABLOY Accessories and Door Controls Group, Inc. Copyright © 2012-2025, ASSA ABLOY Accessories and Door Controls Group, Inc. All rights reserved. Reproduction in whole or in part without the express written permission of ASSA ABLOY Accessories and Door Controls Group, Inc. is prohibited.

Raised Barrel Full Mortise Standard and Heavy Weight Hinges

Raised Barrel Hinges are recommended for use where the door is set in a deep reveal.

- Standard weight raised barrel hinges are recommended for use on average frequency and/or medium weight wood or metal doors where the door is set in a deep revealed frame
- Standard weight raised barrel hinges are supplied with a no hole bottom plug and the pin is held in place by an NRP set screw which allows the hinge to be reversible. Specify RB-TA4714/RB-TA4314 for doors beveled on hinge side
- Heavy weight raised barrel hinges are recommended for use on high frequency and/or heavy wood or metal doors where the door is set in a deep revealed frame
- Heavy weight raised barrel hinges are supplied with a no hole bottom plug and the pin is held in place by an NRP set screw which allows the hinge to be reversible. Specify RB-T4A4786/RB-T4A4386 for doors beveled on hinge side
- Door leaf mortised into door
- Frame leaf may be mortised or surface applied
- Reversible Hinge

RB-TA2314
RB-TA2714

RB-T4A3786
RB-T4A3386

No.	Base Material	Weight
RB-TA2714	Steel	STD
RB-TA2314	Stainless Steel	STD
RB-T4A3786	Steel	HVY
RB-T4A3386	Stainless Steel	HVY

Square Edge Application

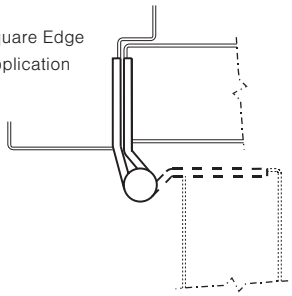

Specifications

Inches	mm	Gauge	No. of Holes	Fasteners Machine	Fasteners Wood
4 1/2" x 4 1/2"	114.3 x 114.3	.134	8	1/2 x 12-24	1 1/4 x 12
4 1/2" x 4 1/2"	114.3 x 114.3	.180	8	1/2 x 12-24	1 1/4 x 12
5" x 4 1/2"	127.0 x 114.3	.190	8	1/2 x 12-24	1 1/4 x 12

Beveled Edge Application

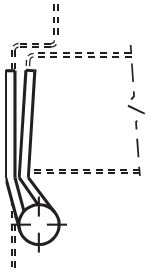

Approved for NFPA 80 fire rated openings

McKinney is a brand associated with ASSA ABLOY Accessories and Door Controls Group, Inc. Copyright © 2012-2025, ASSA ABLOY Accessories and Door Controls Group, Inc. All rights reserved. Reproduction in whole or in part without the express written permission of ASSA ABLOY Accessories and Door Controls Group, Inc. is prohibited.

McKinney
ASSA ABLOY
Experience a safer and more open world

Slip-In Full Mortise Type 1 and 2 Standard Weight Bearing Hinges

Recommended for use on average frequency and/or medium weight aluminum doors with aluminum frames in schools, hospitals and other public buildings where medium traffic is experienced.

TA2314/TA2714
Type 1

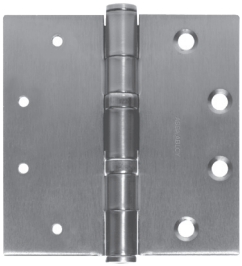

TA2314/TA2714
Type 2

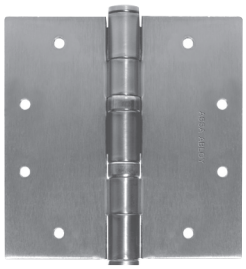

Type 1

- One leaf has standard punching and countersinking and the other leaf is drilled and tapped so it can be inserted through a slot in the door or frame.
- Both leaves are specially swaged to provide 3/16" clearance between leaves when parallel
- Hinges are handed, indicate hand when ordering. LH shown, RH opposite

Type 2

- Both leaves are drilled and tapped so they can be inserted through a slot in the door and frame
- Both leaves are specially swaged to provide 5/16" clearance between the leaves when parallel
- Hinges are non-handed

No.		Base Material	Weight
TA2314	Type 1	Stainless Steel	STD
TA2714	Type 1	Steel	STD
TA2314	Type 2	Stainless Steel	STD
TA2714	Type 2	Steel	STD

Type 1
Application

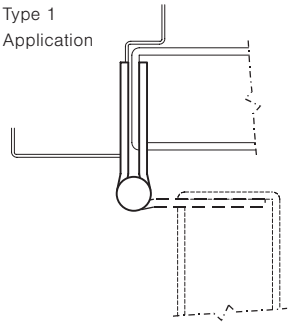

Type 2
Application

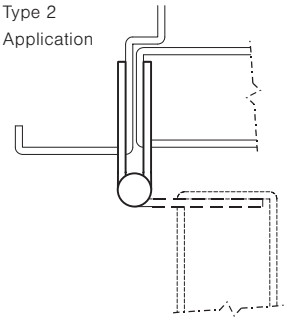

Specifications

Inches	mm	Gauge	No. of Holes	Fasteners Machine	Fasteners Wood
4" x 4" Type 1	101.6 x 101.6	.130	8	1/2 x 12-24	1 1/4 x 12
4 1/2" x 4" Type 1	124.3 x 101.6	.134	8	1/2 x 12-24	1 1/4 x 12
4 1/2" x 4 1/2" Type 1	124.3 x 124.3	.134	8	1/2 x 12-24	1 1/4 x 12

Inches	mm	Gauge	No. of Holes	Fastener Machine
4" x 4" Type 2	101.6 x 101.6	.130	8	1/2 x 12-24
4 1/2" x 4" Type 2	124.3 x 101.6	.134	8	1/2 x 12-24
4 1/2" x 4 1/2" Type 2	124.3 x 124.3	.134	8	1/2 x 12-24

Options:

Code	Description
NRP	Non-Removable Pin

Approved for NFPA 80 fire rated openings

McKinney is a brand associated with ASSA ABLOY Accessories and Door Controls Group, Inc. Copyright © 2012-2025, ASSA ABLOY Accessories and Door Controls Group, Inc. All rights reserved. Reproduction in whole or in part without the express written permission of ASSA ABLOY Accessories and Door Controls Group, Inc. is prohibited.

Full Mortise Interim Hinges

Recommended for installations where door and frame are prepped for two different size hinges.

- For new or retrofit installations
- An equal amount is trimmed from the top and bottom of the leaf
- Interim hinges are supplied with a no hole bottom plug and the pin is held in place by an NRP set screw which allows the hinge to be reversible
- Available in both standard (TA2714; TA2314) and heavy weight (T4A3786; T4A3386)
- For finishes see page 28

TA2714 Interim

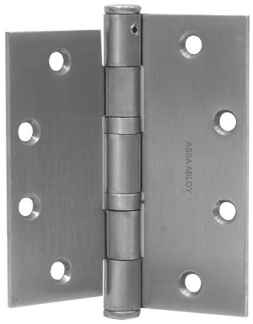

No.	Base Material	Weight
TA2714 Interim	Steel	STD
TA2314 Interim	Stainless Steel	STD
T4A3786 Interim	Steel	HVY
T4A3386 Interim	Stainless Steel	HVY

Specifications

Door Leaf	Jamb Leaf	Gauge	No. of Holes	Fasteners	
				Machine	Wood
5"	4 1/2"*	.146 STD	8	1/2 x 12-24	1 1/4 x 12
4 1/2"*	5"	.146 STD	8	1/2 x 12-24	1 1/4 x 12

Specifications

Door Leaf	Jamb Leaf	Gauge	No. of Holes	Fasteners	
				Machine	Wood
5"	4 1/2"*	.190 HVY	8	1/2 x 12-24	1 1/4 x 12
4 1/2"*	5"	.190 HVY	8	1/2 x 12-24	1 1/4 x 12

*Trimmed to height

Approved for NFPA 80 fire rated openings

McKinney is a brand associated with ASSA ABLOY Accessories and Door Controls Group, Inc. Copyright © 2012-2025, ASSA ABLOY Accessories and Door Controls Group, Inc. All rights reserved. Reproduction in whole or in part without the express written permission of ASSA ABLOY Accessories and Door Controls Group, Inc. is prohibited.

McKinney
ASSA ABLOY
Experience a safer and more open world

Residential Swing Clear Hinge

Swing Clear Hinges create barrier free openings by moving the hinge barrel and door edge out of the way. Recommended for use on new or retrofit applications where accessibility is a current or future issue.

Available Styles

T2895		
Size	Finish	Corners
3 1/2"	US4	1/4" RC
3 1/2"	US4	5/8" RC
3 1/2"	US15	1/4" RC
3 1/2"	US15	5/8" RC
3 1/2"	10BE	1/4" RC
3 1/2"	10BE	5/8" RC
4"	US4	1/4" RC
4"	US15	1/4" RC
4"	10BE	1/4" RC

Specifications

Inches	mm	Gauge	No. of Holes	Fasteners Wood
3 1/2"	88.9	0.086	6	1 x10
4"	101.6	0.123	8	1 1/4 x 12

Base material is steel

Residential Swing Clear Hinge T2895

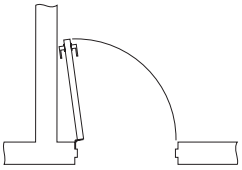

Door opening with a regular hinge

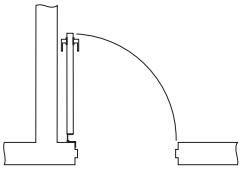

Door opening with a swing clear hinge

RediFrame Swing Clear Hinge

Designed specifically for RediFrame and Timely door frames.

Available Styles

TA2895 & TA4895		
Size	Finish	Corners
4 1/2"	26D	SC

Base material is steel

Specifications

Inches	mm	Gauge	No. of Holes	Fasteners
4 1/2"	114.3	0.134	8	Metal and Wood

Rediframe Swing Clear Hinge TA2895

McKinney ASSA ABLOY

Experience a safer and more open world

800-346-7707 | www.mckinneyhinge.com

Check the web site for the up-to-date catalog

McKinney is a brand associated with ASSA ABLOY Accessories and Door Controls Group, Inc. Copyright © 2012-2025, ASSA ABLOY Accessories and Door Controls Group, Inc. All rights reserved. Reproduction in whole or in part without the express written permission of ASSA ABLOY Accessories and Door Controls Group, Inc. is prohibited.

Residential Spring Hinges

Designed for light weight, self-closing doors.

- Made out of residential grade material making it a perfect fit for multi-family housing and similar applications
- Used as an alternative to door closing devices
- Generally two spring hinges must be used in order to provide the force needed to close the door
- The 3½" hinge is available as the 1552 stainless steel version or the 1502 steel hinge which is offered in a variety of finishes

Part number	Description	Finish
155880	3 1/2 x 3 1/2 1502	3
155881	3 1/2 x 3 1/2 1502	4
155882	3 1/2 x 3 1/2 1502	10
155883	3 1/2 x 3 1/2 1502	10A
155884	3 1/2 x 3 1/2 1502	10B
155884E	3 1/2 x 3 1/2 1502	10BE
155885	3 1/2 x 3 1/2 1502	15
155886	3 1/2 x 3 1/2 1502	26
155887	3 1/2 x 3 1/2 1502	26D
155888	3 1/2 x 3 1/2 1502	BSP
155889	3 1/2 x 3 1/2 1502	P
155890	3 1/2 x 3 1/2 1552	32D

3 1/2 x 3 1/2
1502

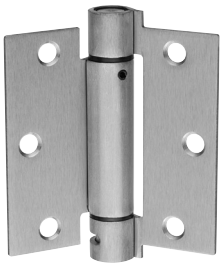

Specifications

Inches	mm	Gauge	No. of Holes	Fasteners Wood	Fasteners Metal
3 1/2" x 3 1/2"	88.9 x 88.9	.106	6	#10 x 1 1/4"	#10-24 x ½"

Residential Hinges

For light weight doors.

- For multi-family and residential applications
- Rounded or square corners
- Consult the factory for availability of other finishes

4 x 4
1400

Part number	Description	Finish	Corners
56689	3 1/2 x 3 1/2 1400	4	Square
56868	3 1/2 x 3 1/2 1458	26D	5/8" radius
56869	3 1/2 x 3 1/2 1458	BSP	5/8" radius
56870	3 1/2 x 3 1/2 1458	3	5/8" radius
56288	3 1/2 x 3 1/2 1400	26D	Square
56281	3 1/2 x 3 1/2 1414	26D	1/4" radius
56748	4 x 4 1400	26D	Square

Base material is steel

3 1/2 x 3 1/2
1414

3 1/2 x 3 1/2
1458

800-346-7707 | www.mckinneyhinge.com
Check the web site for the up-to-date catalog

McKinney is a brand associated with ASSA ABLOY Accessories and Door Controls Group, Inc. Copyright © 2012-2025, ASSA ABLOY Accessories and Door Controls Group, Inc. All rights reserved. Reproduction in whole or in part without the express written permission of ASSA ABLOY Accessories and Door Controls Group, Inc. is prohibited.

McKinney
ASSA ABLOY
Experience a safer and more open world

Decorative Hinges – Square Barrel

Recommended for use on doors of average weight with average frequency.

- Interior or exterior hollow metal and wood frame doors
- 1 3/4" thick doors
- Used with square edge doors only
- Bearing contains anti-friction component
- Cannot be electrified
- SQ314 only:
  - UL Listed for both hollow metal or steel covered composite fire doors rated up to 3 hours
  - UL Listed for wood core fire doors rated 20 minutes

SQ3331
Two Knuckle

No.		Base Material	Handing	Weight
SQ3331	Two Knuckle	Brass	Handed	Special
SQ314	Three Knuckle	Stainless Steel	Non-Handed	Special

Approved for NFPA 80 fire rated openings

c UL us LISTED

SQ314
Three Knuckle

Specifications

Inches	mm	Gauge	No. of Holes	Fasteners Machine	Fasteners Wood
4 1/2" x 4 1/2"	114.3 x 114.3	.177	8	1/2 x 12-24	1 1/4 x 12
4 1/2" x 4*	114.3 x 101.6	.177	8	1/2 x 12-24	1 1/4 x 12

*Size not offered for SQ3331

SQ3331 Finishes
03 – Bright Brass, Clear Coated
10B – Dark Oxidized Satin Bronze, Oil Rubbed
10BE – Dark Oxidized Satin Bronze, Equivalent
14 – Bright Nickel, Clear Coated
15 – Satin Nickel, Clear Coated
26 – Bright Chrome
26D – Satin Chrome
BSP – Black Suede Powder Coat
WSP – White Suede Powder Coat

SQ314 Finish
32D – Satin Stainless Steel

Note: Other finishes may be available upon request

McKinney is a brand associated with ASSA ABLOY Accessories and Door Controls Group, Inc. Copyright © 2012-2025, ASSA ABLOY Accessories and Door Controls Group, Inc. All rights reserved. Reproduction in whole or in part without the express written permission of ASSA ABLOY Accessories and Door Controls Group, Inc. is prohibited.

Decorative Hinges – Olive Knuckle

Recommended for use on interior or exterior hollow metal and wood frame doors.

- Interior or exterior hollow metal and wood frame doors
- $1^{3}/_{8}$" to $1^{3}/_{4}$" thick doors
- Bearing contains anti-friction component
- Specify right or left hand when ordering
- Cannot be electrified

TA3383

No.		Base Material	Weight
TA3383	Olive Knuckle	Brass	LT

Specifications

Inches	mm	Gauge	No. of Holes	Fasteners Machine	Fasteners Wood
6" x $3^{7}/_{8}$"	152.4 x 98.4	.203	8	$^{1}/_{2}$ x 12-24	$1^{1}/_{4}$ x 12

Width of Leaves $^{13}/_{16}$" (20.6mm)

Finishes
03 – Bright Brass, Clear Coated
03NL – Bright Brass, No Lacquer
10B – Dark Oxidized Satin Bronze, Oil Rubbed
10BE – Dark Oxidized Satin Bronze, Equivalent
14 – Bright Nickel, Clear Coated
15 – Satin Nickel, Clear Coated
26 – Bright Chrome
26D – Satin Chrome
BSP – Black Suede Powder Coat
WSP – White Suede Powder Coat

McKinney is a brand associated with ASSA ABLOY Accessories and Door Controls Group, Inc. Copyright © 2012-2025, ASSA ABLOY Accessories and Door Controls Group, Inc. All rights reserved. Reproduction in whole or in part without the express written permission of ASSA ABLOY Accessories and Door Controls Group, Inc. is prohibited.

McKinney
ASSA ABLOY
Experience a safer and more open world

Concealed Hinges

For use on wood or hollow metal doors with wood or metal frames.

- Non-handed
- Opening angle: 180°
- 3-dimensional adjustability

Model	Inches	mm	Number of Holes	Metal	Wood
MK1821A	$6^{3}/_{32}$" x $^{53}/_{64}$"	155 x 21	4	M5 x 20 screws	35mm PHWS
MK4001A	$4^{1}/_{2}$" x $^{7}/_{8}$"	115 x 23	4	M5 x 20 screws	35mm PHWS
MK80	$4^{3}/_{8}$" x $1^{1}/_{8}$"	111.5 x 29	4	M5 x 20 screws	35mm PHWS
MK80A	$4^{3}/_{8}$" x $1^{1}/_{8}$"	111.5 x 29	4	M5 x 20 screws	35mm PHWS
MK80SS	$4^{3}/_{8}$" x $1^{1}/_{8}$"	111.5 x 29	4	M5 x 20 screws	35mm PHWS

Finishes

All but MK80SS:
Satin Chrome
Matte Black

MK80SS only:
Stainless Steel

MK1821A, MK80A:
Matte White

MK80A only:
Polished Chrome
Polished Brass
Polished Copper
Antique Bronze
Satin Brass
Satin Nickel
Antique Brass

Additional finishes on request

Cataphoresis coating is standard on all MK80A hinges, providing a durable and corrosion-resistant surface.

MK1821A Series

- Magnetic covers included
- Door thickness minimum: 1"
- Base material: Zinc alloy

Hinge Capacity

Number of Hinges	Door Width 27.5"	32"	36"	40"
2	227 lbs	198 lbs	176 lbs	158 lbs
3	253 lbs	220 lbs	198 lbs	178 lbs
4	285 lbs	249 lbs	220 lbs	198 lbs

Note: *When installing with a door closer at least 3 hinges are required, and reduce maximum door weight in chart by 30%.*

MK1821A

MK4001A Series

- Snap-on covers included
- Door thickness minimum: $1^{1}/_{4}$"
- Base material: Zinc alloy

Hinge Capacity

Number of Hinges	Door Width 32"	36"	38"	42"	48"
2	138 lbs	130 lbs	123 lbs	112 lbs	97 lbs
3	155 lbs	146 lbs	139 lbs	126 lbs	109 lbs
4	166 lbs	156 lbs	148 lbs	135 lbs	116 lbs

Note: *When installing with a door closer at least 3 hinges are required, and reduce maximum door weight in chart by 30%.*

MK4001A

MK80/MK80A/MK80SS Series

- Covers:
  - MK80/MK80SS: No covers
  - MK80A: Magnetic covers included
- Door thickness minimum: $1^{3}/_{8}$"
- Base material:
  - MK80/MK80A: Zinc alloy
  - MK80SS: Stainless Steel
- Cataphoresis coating (MK80A only)

Hinge Capacity

Number of Hinges	Door Width 32"	36"	42"	48"
2	185 lbs	176 lbs	143 lbs	132 lbs
3	211 lbs	198 lbs	160 lbs	149 lbs
4	233 lbs	220 lbs	171 lbs	158 lbs

Note: *When installing with a door closer at least 3 hinges are required, and reduce maximum door weight in chart by 30%.*

MK80

MK80A

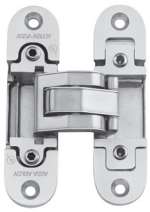

MK80SS

c UL us LISTED

MK80SS approved for NFPA80 fire rated openings

McKinney
ASSA ABLOY

Experience a safer and more open world

800-346-7707 | www.mckinneyhinge.com
Check the web site for the up-to-date catalog

McKinney is a brand associated with ASSA ABLOY Accessories and Door Controls Group, Inc. Copyright © 2012-2025, ASSA ABLOY Accessories and Door Controls Group, Inc. All rights reserved. Reproduction in whole or in part without the express written permission of ASSA ABLOY Accessories and Door Controls Group, Inc. is prohibited.

Concealed Hinges

For use on wood or hollow metal doors with wood or metal frames.

- Non-handed
- Opening angle: 180°
- 3-dimensional adjustability

Model	Inches	mm	Number of Holes	Metal	Wood
MK100	$6^{1}/_{4}$" x $1^{1}/_{16}$"	160 x 28	8	M5 x 20 screws	35mm PHWS
MK100ME	$6^{1}/_{4}$" x $1^{1}/_{16}$"	160 x 28	8	M5 x 20 screws	35mm PHWS
MK130+8	$7^{7}/_{8}$" x $1^{1}/_{2}$"	200 x 37	8	M5 x 20 screws	35mm PHWS
MK130+8ME	$7^{7}/_{8}$" x $1^{1}/_{2}$"	200 x 37	8	M5 x 20 screws	35mm PHWS

Finishes

All:
Satin Chrome
Matte Black

MK100 only:
Matte White
Polished Chrome
Polished Brass
Polished Copper
Antique Bronze
Satin Brass

Additional finishes on request

Cataphoresis coating is standard on MK100, MK130+8 & MK130+8ME hinges, providing a durable and corrosion-resistant surface.

MK100/MK100ME Series

- Magnetic covers included
- Door thickness minimum: $1^{3}/_{8}$"
- Base material: Zinc alloy
- ANSI/BHMA 156.1 Grade 1 (MK100 only)
- MK100ME available in CC12 and QC12 configurations
- Cataphoresis coating (MK100 only)

Hinge Capacity

Number of Hinges	Door Width 32"	36"	42"	48"
2	224 lbs	220 lbs	180 lbs	165 lbs
3	253 lbs	246 lbs	202 lbs	185 lbs
4	282 lbs	275 lbs	216 lbs	198 lbs

Note: *When installing with a door closer at least 3 hinges are required, and reduce maximum door weight in chart by 30%.*

MK100

BHMA CERTIFIED

MK100ME

c UL us LISTED

MK130+8/MK130+8ME Series

- Magnetic covers included
- Clears cladding on door up to 8 mm (1/3")
- Base material: Zinc alloy
- Door thickness minimum: 1-3/4"
- MK130+8ME available in CC12 and QC12 configurations
- Cataphoresis coating

Hinge Capacity

Number of Hinges	Door Width 27.5"	31.5"	36"	40"
2	368 lbs	322 lbs	287 lbs	258 lbs
3	414 lbs	362 lbs	322 lbs	291 lbs
4	461 lbs	403 lbs	359 lbs	322 lbs

Note: *When installing with a door closer at least 3 hinges are required, and reduce maximum door weight in chart by 30%.*

MK130+8

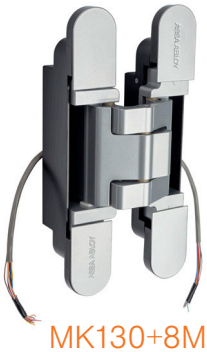

MK130+8ME

McKinney is a brand associated with ASSA ABLOY Accessories and Door Controls Group, Inc. Copyright © 2012-2025, ASSA ABLOY Accessories and Door Controls Group, Inc. All rights reserved. Reproduction in whole or in part without the express written permission of ASSA ABLOY Accessories and Door Controls Group, Inc. is prohibited.

McKinney
ASSA ABLOY
Experience a safer and more open world

Concealed Hinges

For use on wood or hollow metal doors with wood or metal frames.

- Non-handed
- Opening angle: 180°
- 3-dimensional adjustability

Model	Inches	mm	Number of Holes	Metal	Wood
MK150	$7\frac{7}{8}$" x $1\frac{1}{4}$"	200 x 32	8	M5 x 20 screws	35mm PHWS
MK150ME	$7\frac{7}{8}$" x $1\frac{1}{4}$"	200 x 32	8	M5 x 20 screws	35mm PHWS
MK200	$10\frac{1}{4}$" x $1\frac{3}{8}$"	260 x 36	8	M5 x 20 screws	35mm PHWS
MK200ME	$10\frac{1}{4}$" x $1\frac{3}{8}$"	260 x 36	8	M5 x 20 screws	35mm PHWS

Finishes

MK150, MK200:
Satin Chrome
Satin Brass

MK150ME, MK200ME:
Matte Black
Satin Chrome

Additional finishes on request

Cataphoresis coating is standard on MK150ME & MK200ME hinges, providing a durable and corrosion-resistant surface.

MK150/MK150ME Series

- Magnetic covers included
- Door thickness minimum: $1\frac{1}{2}$"
- MK150ME available in CC12 and QC12 configurations
- Base Material: Zinc alloy
- ANSI/BHMA A156.1 Double Weight Testing Accomplished
- Cataphoresis coating (MK150ME only)

Hinge Capacity

Number of Hinges	Door Width 32"	36"	38"	42"	48"
2	366 lbs	326 lbs	313 lbs	280 lbs	245 lbs
3	412 lbs	367 lbs	352 lbs	315 lbs	275 lbs
4	457 lbs	408 lbs	391 lbs	350 lbs	306 lbs

Note: *When installing with a door closer at least 3 hinges are required, and reduce maximum door weight in chart by 30%.*

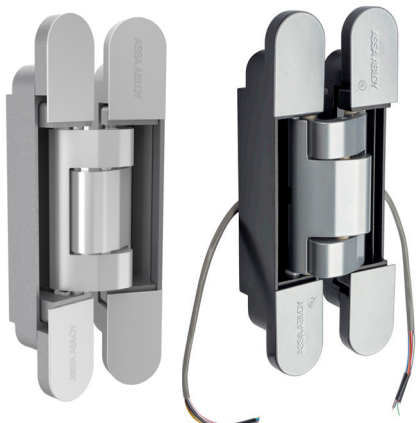

MK150 MK150ME

c UL us LISTED

BHMA CERTIFIED

MK200/MK200ME Series

- Magnetic covers included
- Door thickness minimum: $1\frac{3}{4}$"
- MK200ME available in CC12 and QC12 configurations
- Base Material: Zinc alloy
- ANSI/BHMA A156.1 Triple Weight Testing Accomplished
- Cataphoresis coating (MK200ME only)

Hinge Capacity

Number of Hinges	Door Width 32"	36"	38"	42"	48"
2	487 lbs	434 lbs	417 lbs	373 lbs	326 lbs
3	548 lbs	489 lbs	469 lbs	419 lbs	367 lbs
4	609 lbs	543 lbs	521 lbs	466 lbs	408 lbs

Note: *When installing with a door closer at least 3 hinges are required, and reduce maximum door weight in chart by 30%.*

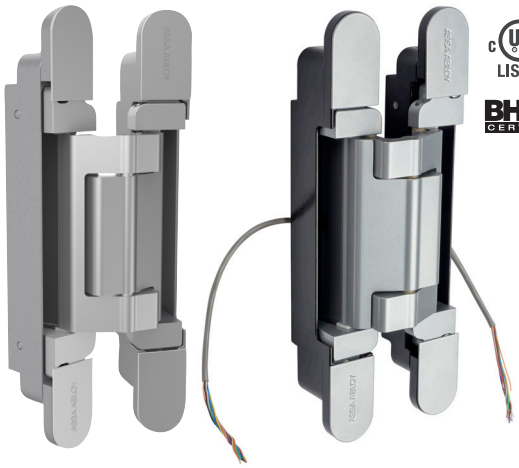

MK200 MK200ME

c UL us LISTED

BHMA CERTIFIED

McKinney ASSA ABLOY

Experience a safer and more open world

800-346-7707 | www.mckinneyhinge.com
Check the web site for the up-to-date catalog

McKinney is a brand associated with ASSA ABLOY Accessories and Door Controls Group, Inc. Copyright © 2012-2025, ASSA ABLOY Accessories and Door Controls Group, Inc. All rights reserved. Reproduction in whole or in part without the express written permission of ASSA ABLOY Accessories and Door Controls Group, Inc. is prohibited.

Concealed Hinges

For use on wood or hollow metal doors with wood or metal frames.

- Non-handed
- Opening angle: 180°
- 3-dimensional adjustability

Model	Inches	mm	Number of Holes	Metal	Wood
MK250	9 $^{1}/_{2}$" x 1$^{1}/_{4}$"	240 x 32	8	M5 x 20 screws	35mm PHWS

Finishes
MK250: Satin Chrome Satin Brass
Additional finishes on request

Cataphoresis coating is standard on MK250 hinges, providing a durable and corrosion-resistant surface.

MK250 Series

- Magnetic covers included
- Door thickness minimum: 1$^{5}/_{8}$"
- Base Material: Zinc alloy
- Cataphoresis coating

Hinge Capacity

Number of Hinges	Door Width 32"	36"	38"	42"	48"
2	487 lbs	434 lbs	417 lbs	373 lbs	326 lbs
3	548 lbs	489 lbs	469 lbs	419 lbs	367 lbs
4	609 lbs	543 lbs	521 lbs	466 lbs	408 lbs

Note: *When installing with a door closer at least 3 hinges are required, and reduce maximum door weight in chart by 30%.*

MK250

McKinney is a brand associated with ASSA ABLOY Accessories and Door Controls Group, Inc. Copyright © 2012-2025, ASSA ABLOY Accessories and Door Controls Group, Inc. All rights reserved. Reproduction in whole or in part without the express written permission of ASSA ABLOY Accessories and Door Controls Group, Inc. is prohibited.

McKinney
ASSA ABLOY
Experience a safer and more open world

Concealed Hinge Accessories

MK67078 Concealed Hinge Universal Jig

- Precise, effortless door milling
- No measuring required
- Interchangeable templates for MK1821A, MK4001A, MK80, MK80A, MK80SS, MK100, MK130+8, MK150, MK200
- Eliminates need for multiple jigs

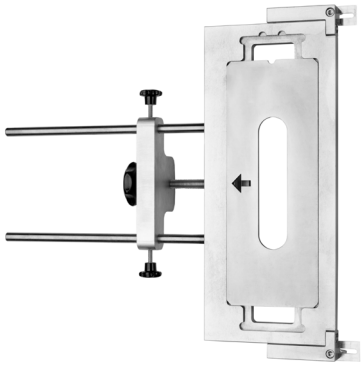

MKCONBRACKET Concealed Hinge Bracket

- Crafted from 4.5mm thick steel
- Available for both frame-side and door-side applications
- Engineered to fit MK80, MK80A, MK80SS, and MK100 hinges
- Designed for reinforcement, stability, and effortless installation

McKinney is a brand associated with ASSA ABLOY Accessories and Door Controls Group, Inc. Copyright © 2012-2025, ASSA ABLOY Accessories and Door Controls Group, Inc. All rights reserved. Reproduction in whole or in part without the express written permission of ASSA ABLOY Accessories and Door Controls Group, Inc. is prohibited.

Cam Lift Hinges

Move the door up and then lower it to create a tight seal when the door is closed. These hinges are recommended for acoustic doors and energy saving doors with seals.

- 4 models for standard and heavy weight metal doors
- 304 Stainless Steel Material, 32D Finish
- Handed- specify right (RH) or left handed (LH) when ordering
- Clearance - Minimum clearance at head of frame is $^{3}/_{16}$". For doors greater than $1^{3}/_{4}$" clearance is $^{1}/_{4}$"

Model	Size	Fasteners	No. Of Holes	Lift (180° Opening)	Door Rating (1½ Pairs)	Thickness
MKCL134	$4^{1}/_{2}$" x $4^{1}/_{2}$"	12-24 x $^{3}/_{4}$"	8	$^{3}/_{16}$"	up to 200 lbs	.134
MKCL180	5" x $4^{1}/_{2}$"	12-24 x $^{3}/_{4}$"	8	$^{1}/_{4}$"	up to 300 lbs	.180
MKCL250	5" x $4^{1}/_{2}$"	12-24 x $^{3}/_{4}$"	8	$^{5}/_{16}$"	up to 500 lbs	.25
MKCL2500	5" x $4^{1}/_{2}$"	$^{5}/_{16}$-18 x $^{3}/_{4}$"	8	$^{5}/_{16}$"	up to 900 lbs	.25

Approved for NFPA80 fire rated openings

Cam Lift Hinge (RH)
MKCL134

Cam Lift Hinge (LH)
MKCL180

Pivot Reinforcing Hinges

Installed at the top of the door and to the head of the frame and are used as a retrofit solution to fix sagging or damaged doors.

- Handed
- Installed at the top of the door and to the head of the frame
- Satin stainless steel (5540, 5545) and satin nickel plated (8540, 8545) finishes only
- Retrofittable
- Fixes sagging or damaged doors

5540
5545

8540
8545

Model	Inches	Millimeters	Gauge	No. of Holes	Fastener
5540	4"	101.6	0.190	9	Oval Philips Head Machine Screw with Grommet Nut
5545	4½"	114.3	0.190	9	Oval Philips Head Machine Screw with Grommet Nut
8540	4"	101.6	0.190	9	Oval Philips Head Machine Screw with Grommet Nut
8545	4½"	114.3	0.190	9	Oval Philips Head Machine Screw with Grommet Nut

McKinney is a brand associated with ASSA ABLOY Accessories and Door Controls Group, Inc. Copyright © 2012-2025, ASSA ABLOY Accessories and Door Controls Group, Inc. All rights reserved. Reproduction in whole or in part without the express written permission of ASSA ABLOY Accessories and Door Controls Group, Inc. is prohibited.

Notes

800-346-7707 | www.mckinneyhinge.com
Check the web site for the up-to-date catalog

McKinney is a brand associated with ASSA ABLOY Accessories and Door Controls Group, Inc. Copyright © 2012-2025, ASSA ABLOY Accessories and Door Controls Group, Inc. All rights reserved. Reproduction in whole or in part without the express written permission of ASSA ABLOY Accessories and Door Controls Group, Inc. is prohibited.

Notes

McKinney is a brand associated with ASSA ABLOY Accessories and Door Controls Group, Inc. Copyright © 2012-2025, ASSA ABLOY Accessories and Door Controls Group, Inc. All rights reserved. Reproduction in whole or in part without the express written permission of ASSA ABLOY Accessories and Door Controls Group, Inc. is prohibited.

The ASSA ABLOY Group is the global leader in access solutions. Every day, we help billions of people experience a more open world.

ASSA ABLOY Opening Solutions leads the development within door openings and products for access solutions in homes, businesses and institutions. Our offering includes doors, frames, door and window hardware, mechanical and smart locks, access control and service.

McKinney
225 Episcopal Road
Berlin, CT 06037
www.mckinneyhinge.com
1 800 346 7707

ASSA ABLOY Opening Solutions
Door Security Solutions Canada
160 Four Valley Drive
Vaughan, ON L4K 4T9
www.assaabloydss.ca
1 800 461 3007

McKinney is a product line of ASSA ABLOY Accessories and Door Controls Group, Inc., an ASSA ABLOY Group company.
Copyright © 2020-2026, ASSA ABLOY Accessories and Door Controls Group, Inc. All rights reserved. Reproduction in whole or in part without the express written permission of ASSA ABLOY Accessories and Door Controls Group, Inc. is prohibited. Printed in the U.S.A.

51510 5672 8/26